PARTS MANUAL

MQ POWER®

WHISPERWATT™ SERIES

MODEL DCA45SSIU4F

60Hz GENERATOR

(ISUZU 4LE2X DIESEL ENGINE)

PARTS LIST NO. M18713002040

Revision #11 (07/16/26)

To find the latest revision of this publication or associated operation manual, visit our website at: www.mqpower.com

DCA45SSIU4F
60Hz Generator

Explanation of Code in Remarks Column..... 4
Suggested Spare Parts 5

Component Drawings

Generator Assembly 6–7
Control Panel Assembly 8–9
Control Box 1 Assembly 10–13
Control Box 2 Assembly 14–15
Engine and Radiator Assembly 16–19
Output Terminal Assembly..... 20–23
Battery Assembly..... 24–25
Muffler Assembly 26–27
Fuel Tank Assembly..... 28–29
Enclosure Assembly 30–35
Rubber Seals Assembly 36–37
Battery Charger Assembly (Option)..... 38–39
Engine Block Heater Assembly (Option) 40–41
Nameplate and Decals Assembly..... 42–45

NOTICE

Specifications and part numbers are subject to change without notice.

NOTES

EXPLANATION OF CODE IN REMARKS COLUMN

The following section explains the different symbols and remarks used in the Parts section of this manual. Use the help numbers found on the back page of the manual if there are any questions.

NOTICE

The contents and part numbers listed in the parts section are subject to change without notice. Multiquip does not guarantee the availability of the parts listed.

SAMPLE PARTS LIST

NO.	PART NO.	PART NAME	QTY.	REMARKS
1	12345	BOLT	1	INCLUDES ITEMS W/%
2%		WASHER, 1/4 IN.		NOT SOLD SEPARATELY
2%	12347	WASHER, 3/8 IN.	1	MQ-45T ONLY
3	12348	HOSE	A/R	MAKE LOCALLY
4	12349	BEARING	1	S/N 2345B AND ABOVE

NO. Column

Unique Symbols — All items with same unique symbol (@, #, +, %, or >) in the number column belong to the same assembly or kit, which is indicated by a note in the "Remarks" column.

Duplicate Item Numbers — Duplicate numbers indicate multiple part numbers, which are in effect for the same general item, such as different size saw blade guards in use or a part that has been updated on newer versions of the same machine.

NOTICE

When ordering a part that has more than one item number listed, check the remarks column for help in determining the proper part to order.

PART NO. Column

Numbers Used — Part numbers can be indicated by a number, a blank entry, or TBD.

TBD (To Be Determined) is generally used to show a part that has not been assigned a formal part number at the time of publication.

A blank entry generally indicates that the item is not sold separately or is not sold by Multiquip. Other entries will be clarified in the "Remarks" Column.

QTY. Column

Numbers Used — Item quantity can be indicated by a number, a blank entry, or A/R.

A/R (As Required) is generally used for hoses or other parts that are sold in bulk and cut to length.

A blank entry generally indicates that the item is not sold separately. Other entries will be clarified in the "Remarks" Column.

REMARKS Column

Some of the most common notes found in the "Remarks" Column are listed below. Other additional notes needed to describe the item can also be shown.

Assembly/Kit — All items on the parts list with the same unique symbol will be included when this item is purchased.

Indicated by:

"INCLUDES ITEMS W/(unique symbol)"

Serial Number Break — Used to list an effective serial number range where a particular part is used.

Indicated by:

"S/N XXXXX AND BELOW"
"S/N XXXX AND ABOVE"
"S/N XXXX TO S/N XXX"

Specific Model Number Use — Indicates that the part is used only with the specific model number or model number variant listed. It can also be used to show a part is NOT used on a specific model or model number variant.

Indicated by:

"XXXXX ONLY"
"NOT USED ON XXXX"

"Make/Obtain Locally" — Indicates that the part can be purchased at any hardware shop or made out of available items. Examples include battery cables, shims, and certain washers and nuts.

"Not Sold Separately" — Indicates that an item cannot be purchased as a separate item and is either part of an assembly/kit that can be purchased, or is not available for sale through Multiquip.

DCA45SSIU4F WHISPERWATT GENERATOR WITH ISUZU 4LE2X DIESEL ENGINE

1 TO 3 UNITS

Qty.	P/N	Description
3	8980756761	ELEMENT, OIL FILTER
3	P822769	AIR FILTER (SAFETY)
3	PMAF25436	CARTRIDGE AIR FILTER (PRIMARY)
6	8982402800	ELEMENT, FUEL FILTER (MAIN)
6	8982402790	ELEMENT, FUEL FILTER (PRE)
6	8980714010	FILTER FUEL, FEED PUMP
1	Y0601806683	FUSE, 8A 250V
2	0601806671	FUSE, 15A
3	0601802149	FUSE, 10A
1	0601802133	FUSE, 5A
1	0601806644	FUSE, 30A
2	0601810277	BULB, LAMP
2	0601870440	CIRCUIT BREAKER 1P 20A
3	0601870441	CIRCUIT BREAKER 2P 50A
1	0605505070	CAP, FUEL TANK

NOTICE

Part number on this Suggested Spare Parts list may supersede/replace the P/N shown in the text pages of this book.

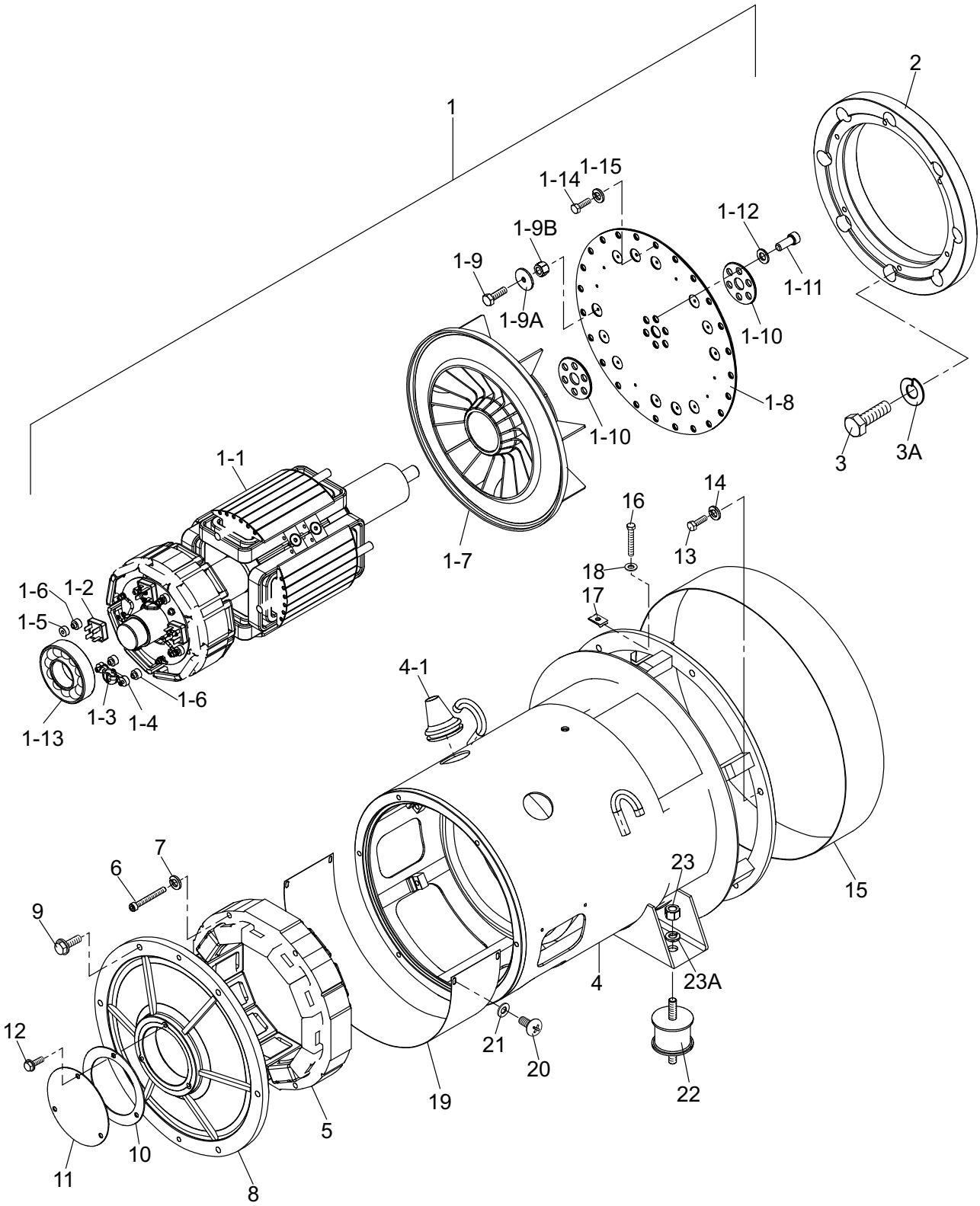
1
2
1-14
1-15
1-12
1-9B
1-9
1-11
1-9A
1-10
1-8
1-10
3
3A
1-1
14
16
13
1-7
18
17
1-6
1-2
1-5
4-1
1-6
1-3
1-4
1-13
7
6
23
15
9
4
23A
12
21
20
22
19
5
10
11
8

NO.	PART NO.	PART NAME	QTY.	REMARKS
1	B3110100702	ROTOR ASSY.	1	INCLUDES ITEMS W/$
1-1$		FIELD ASSY	1	
1-2$	0601820083	RECTIFIER, S25VB60	3	
1-3$	0601822664	ZNR	1	
1-4$	B3120100804	HOLDER, ZNR	1	
1-5$	B3120100604	INSULATOR WASHER	3	
1-6$	B3120100704	INSULATOR WASHER	5	
1-7$	B3111100603	FAN	1	
1-8$	B3163100204	COUPLING DISK	3	PURCHASE ITEM 1-9 AS A SET
1-9	0010304016	HEX. HEAD BOLT		
1-9A	B4163700004	BALANCING WEIGHT		
1-9B	0204004000	U-NUT		
1-10$	B3163200104	COUPLING WASHER	2	
1-11$	0342612030	HEX. SOCKET HEAD CAP SCREW	6	
1-12$	0046512000	WASHER, FLAT	6	
1-13$	0071906309	BEARING	1	
1-14	011208025	HEX. HEAD BOLT	8	REPLACES P/N 0010308025
1-15	0042508000	WASHER, LOCK	8	
2	M1164400203	COUPLING RING	1	
3	012210035	HEX. HEAD BOLT	8	REPLACES P/N 0010310035
3A	0040010000	WASHER, LOCK	8	
4	B3130101003	STATOR ASSY.	1	INCLUDES ITEMS W/#
4-1#	0845041904	GROMMET	2	
5	B3137000803	FIELD ASSY., EXCITER	1	
6	0016008060	HEX. SOCKET HEAD CAP SCREW	4	
7	0042508000	WASHER, LOCK	4	
8	B3153000513	END BRACKET	1	
9	0017108035	HEX. HEAD BOLT	6	
10	B3153400504	PACKING	1	
11	B3153400404	COVER, SUCTION	1	
12	0017106016	HEX. HEAD BOLT	3	
13	0105091025	HEX. HEAD BOLT	12	REPLACES P/N 0010310025
14	030210250	WASHER, LOCK	12	REPLACES P/N 0042510000
15	B3131300004	COVER, END BRACKET	1	
16	0340406040	HEX. HEAD BOLT	1	
17	020106050	NUT USN-6001	1	REPLACES P/N 0600815000
18	952404470	WASHER, FLAT	1	REPLACES P/N 0041206000
19	B3131300804	COVER, END BRACKET	1	
20	0029205012	MACHINE SCREW	4	
21	0401450050	WASHER, FLAT	4	REPLACES P/N 0041205000
22	Y0605000407	RUBBER SUSPENSION	2	
23	0030012000	HEX. NUT	2	
23A	0040012000	WASHER, LOCK	2	

CONTROL PANEL ASSY.

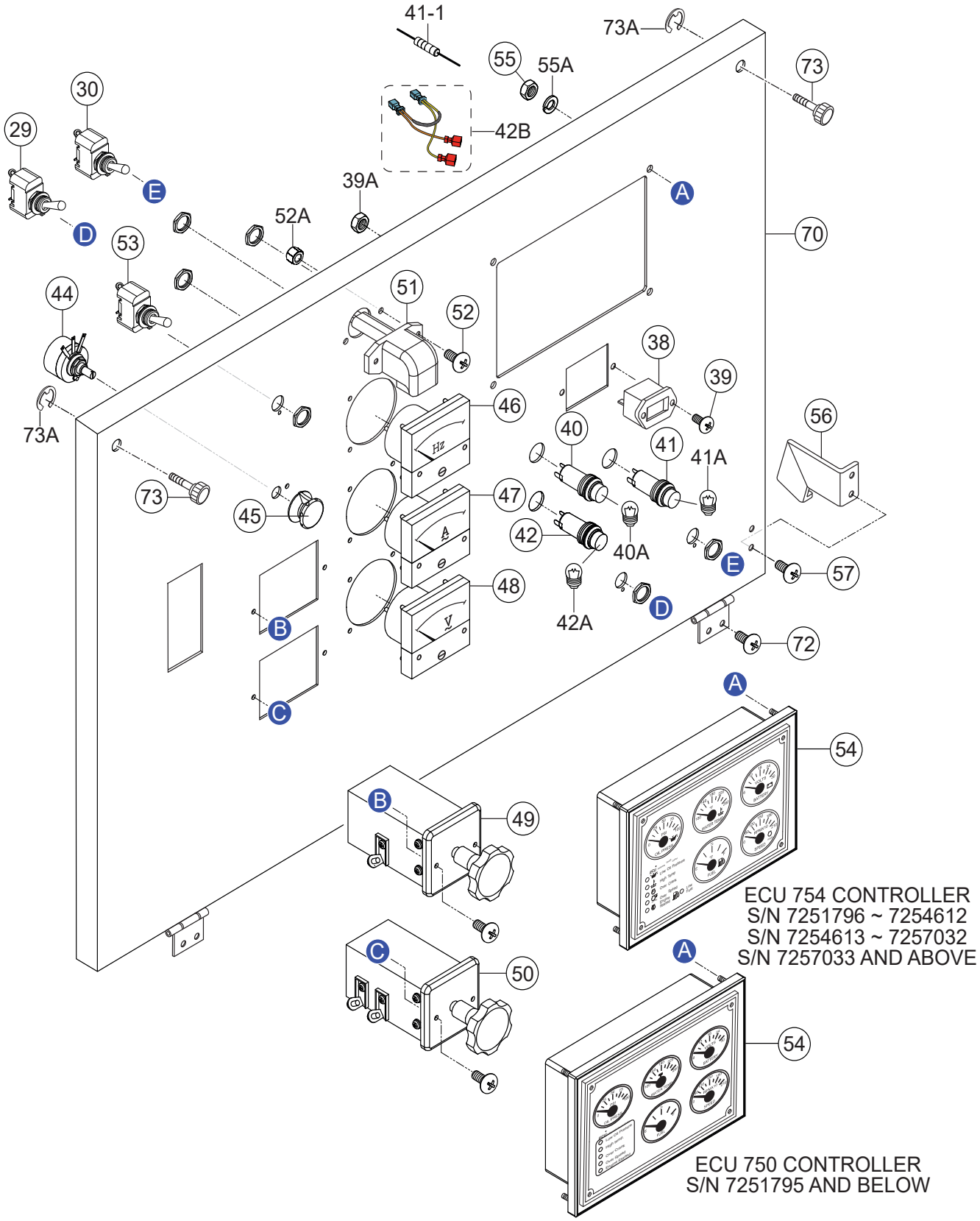

NO.	PART NO.	PART NAME	QTY.	REMARKS
29	82608	AUTO START/STOP SWITCH	1	REPLACES P/N 0601831340 S/N 7258137 AND BELOW
29	Y0601831345	AUTO START/STOP SWITCH	1	S/N 7258138 AND ABOVE
30	0601830710	ENGINE SPEED SWITCH	1	
38	0601800682	HOUR METER #82014	1	S/N 7255122 AND BELOW
38	Y0601800674	HOUR METER, LD12F1RS-B	1	S/N 7255123 AND ABOVE
39	0027103015	MACHINE SCREW	2	
39A	0207003000	SELF-LOCKING NUT	2	
40	0602103092	FUEL LEAK DETECTED ALARM LAMP, 18V	1	INCLUDES ITEMS W/# S/N 7254062 AND BELOW
40	Y0601814453	FUEL LEAK DETECTED ALARM LED LAMP	1	S/N 7254063 AND ABOVE
40A#	0601810277	BULB, 18V	1	S/N 7254062 AND BELOW
41	0602103092	PREHEAT LAMP 18V	1	INCLUDES ITEMS W/$ S/N 7254062 AND BELOW
41	Y0601814453	PREHEAT LED LAMP	1	INCLUDES ITEMS W/ @ S/N 7254063 AND ABOVE
41A$	0601810277	BULB, 18V	1	S/N 7254062 AND BELOW
41-1@	Y0601842542	RESISTOR	1	S/N 7254063 AND ABOVE
42	0602103092	WARNING LAMP, 18V	1	INCLUDES ITEMS W/% S/N 7254062 AND BELOW
42	Y0601814453	WARNING LED LAMP	1	S/N 7254063 AND ABOVE
42A%	0601810277	BULB, 18V	1	S/N 7254062 AND BELOW
42B	M1358203504	RESISTOR HARNESS	1	S/N 7254063 AND ABOVE
44	0601840073	RHEOSTAT (VR): 2W 1K OHM	1	
45	0601840100	KNOB, 25N	1	REPLACES P/N 0601840121
46	Y0601807631	FREQUENCY METER 45~65HZ 240V	1	S/N 7251755 AND BELOW
46	0601807641	FREQUENCY METER 45~65HZ 240V	1	S/N 7251756 AND ABOVE
47	Y0601817033	AC AMMETER, 0~75A, 0~150A/5A	1	S/N 7251755 AND BELOW
47	0601808986	AC AMMETER, 0~75A, 0~150A/5A	1	S/N 7251756 AND ABOVE
48	Y0601806947	AC VOLTMETER, 0~600V	1	S/N 7251755 AND BELOW
48	0601806859	AC VOLTMETER, 0~600V	1	S/N 7251756 AND ABOVE
49	0601801040	CHANGE-OVER SWITCH, AMMETER	1	
50	0601801041	CHANGE-OVER SWITCH, VOLTMETER	1	
51	Y0601810170	PANEL LIGHT, 12V	1	
52	0027104020	MACHINE SCREW	2	
52A	OEMAA8	SELF-LOCKING NUT	2	REPLACES P/N 0207004000
53	0601830710	PANEL LIGHT SWITCH	1	
54	Y0602202653	CONTROLLER, ECU-750	1	S/N 7251795 AND BELOW
54	Y0602203045	CONTROLLER, ECU-754	1	S/N 7251796 ~ 7254612
54	Y0602203074	CONTROLLER, ECU-754	1	S/N 7254613 ~ 7257032
54	Y0602203084	CONTROLLER, ECU-755	1	S/N 7257033 AND ABOVE
55	Y0206707000	HEX. NUT	4	
55A	Y0044807000	WASHER, LOCK	4	
56	M1224100104	STOPPER	1	
57	0027105015	MACHINE SCREW	2	
70	M1224000203	CONTROL PANEL	1	
72	0027105010	MACHINE SCREW	4	
73	M9220100004	SET SCREW	2	
73A	0080200007	E-SNAP RING	2	

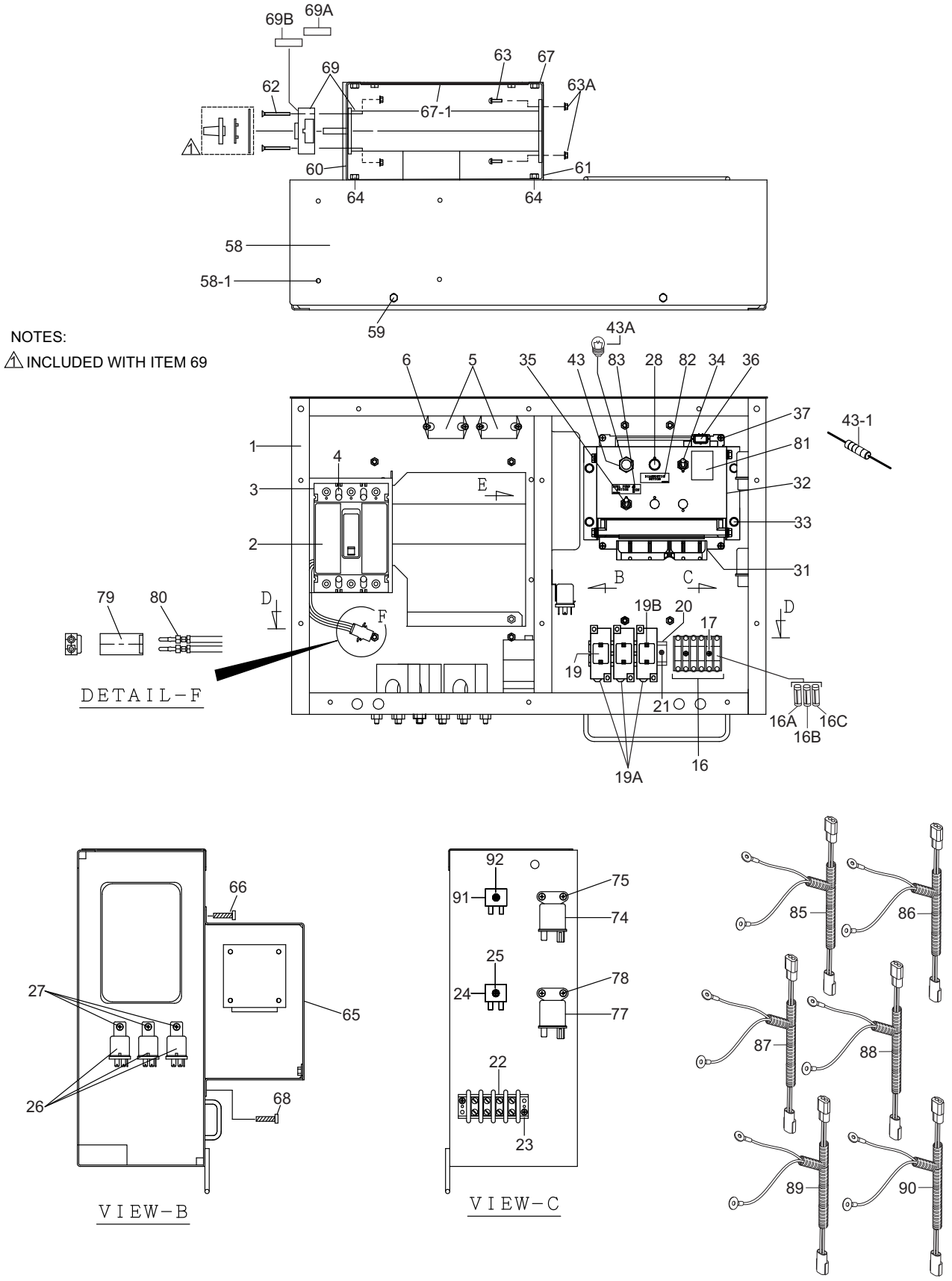
69B
69A
63
67
69
62
63A
67-1
60
61
64
64
58
58-1
59
NOTES:
⚠ INCLUDED WITH ITEM 69
43A
6
5
35
43
83
28
82
34
36
37
43-1
81
1
4
3
E
32
33
2
31
B
C
79
80
D
F
19B
20
17
D
19
DETAIL-F
21
16A
16C
16B
16
19A
66
27
65
26
68
VIEW-B
92
91
75
74
25
24
78
77
22
23
VIEW-C
85
86
87
88
89
90

CONTROL BOX 1 ASSY.

NO.	PART NO.	PART NAME	QTY.	REMARKS
1	M1214000402	CONTROL BOX	1	S/N 7251510 AND BELOW
1	M1214000412	CONTROL BOX	1	S/N 7251511 AND ABOVE
2	0601870431	CIRCUIT BREAKER, 3P 110A	1	
3	0601870490	END CAP KIT	2	
4	0021004040	MACHINE SCREW	4	
5	0601823863	RELAY UNIT	2	
6	7538070	MACHINE SCREW	4	REPLACES P/N 0027104015
16	0601802218	HOLDER, FUSE, 3 POLE POSITION	1	REPLACES P/N Y0601802214 S/N 7257032 AND BELOW S/N 7257248 AND ABOVE
16	Y0601818020	HOLDER, FUSE, 1 POLE POSITION	2	S/N 7257033 ~ 7257247
16	Y0601818021	HOLDER, FUSE, 2 POLE POSITION	2	S/N 7257033 ~ 7257247
16A	0601806671	FUSE, 15A	2	
16B	0601802149	FUSE, 10A	3	
16C	0601802133	FUSE, 5A	1	
17	0027103015	MACHINE SCREW	2	S/N 7257032 AND BELOW S/N 7257248 AND ABOVE
17	0027103010	MACHINE SCREW	4	S/N 7257033 ~ 7257247
19	LY2DUS12VDC	RELAY	2	REPLACES P/N 0601827656 S/N 7251215 AND BELOW
19	LY2DUS12VDC	RELAY	1	REPLACES P/N 0601827656 S/N 7251216 AND ABOVE
19A	PTF08A	BASE	2	REPLACES P/N 0601823109 S/N 7251215 AND BELOW
19A	PTF08A	BASE	1	REPLACES P/N 0601823109 S/N 7251216 AND ABOVE
19B	PYCA1	CLIP	4	REPLACES P/N 0601824400 S/N 7251215 AND BELOW
19B	PYCA1	CLIP	2	REPLACES P/N 0601824400 S/N 7251216 AND ABOVE
20	Y0290000100	MOUNTING RAIL	1	
21	7538070	MACHINE SCREW	2	REPLACES P/N 0027104015
22	0601815153	TERMINAL BLOCK 603-GP-04	1	S/N 7255620 AND BELOW
22	Y0601816538	TERMINAL BLOCK TB400-04	1	S/N 7255621 AND ABOVE
23	7538070	MACHINE SCREW	2	REPLACES P/N 0027104015
24	0601821370	RECTIFIER	2	REPLACES P/N 0601823240
25	0027104030	MACHINE SCREW	1	
26	5825500290	RELAY	3	REPLACES P/N 0602201400
27	0027105010	MACHINE SCREW	3	
28	0601831205	PUSH BUTTON SWITCH	1	
31	8975062140	ENGINE CONTROLLER (ECM)	1	REPLACES P/N 8982460530
32	M1214600204	CONTROLLER BRACKET	1	
33	011106015	HEX. HEAD BOLT	8	REPLACES P/N 0016906015
34	0601830710	DIAGNOSTIC SWITCH	1	
35	0601830762	FUEL PUMP SWITCH	1	
36	8972177780	BAROMETRIC PRESSURE SENSOR	1	REPLACES P/N 0602130220
37	0027105015	MACHINE SCREW	2	

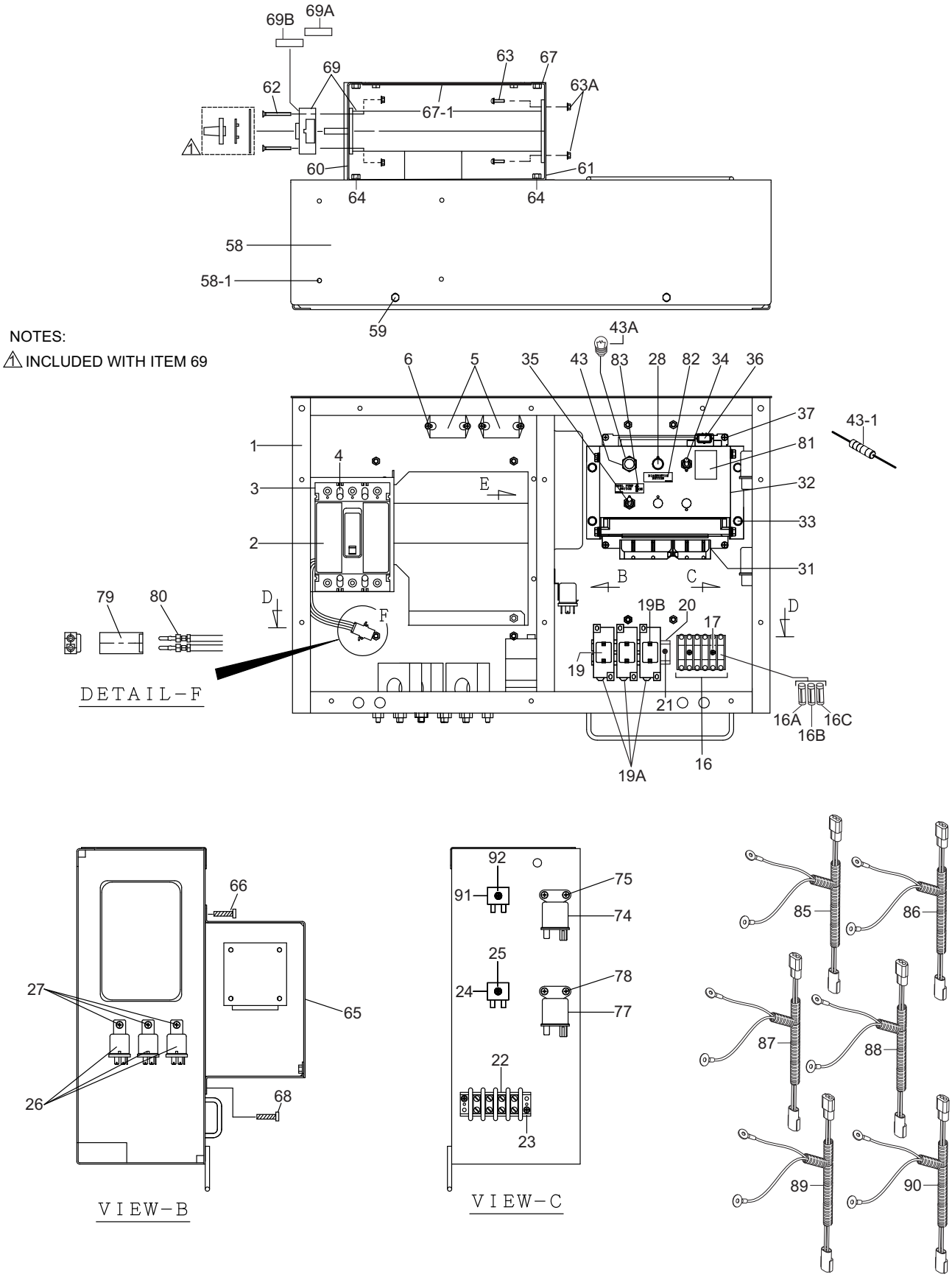
69B
69A
69
62
63
67
63A
67-1
60
61
64
64
58
58-1
59
NOTES:
1 INCLUDED WITH ITEM 69
43A
6
5
35
43
83
28
82
34
36
37
43-1
81
1
4
3
E
32
33
2
31
B
C
79
80
D
F
19B
20
17
D
19
21
DETAIL-F
16A
16C
16B
19A
16
66
27
65
26
68
VIEW-B
92
91
75
74
25
24
78
77
22
23
VIEW-C
85
86
87
88
89
90

NO.	PART NO.	PART NAME	QTY.	REMARKS
43	0602103092	ALARM LAMP, 18V	1	INCLUDES ITEMS W/# S/N 7254062 AND BELOW
43	Y0601814453	ALARM LED LAMP	1	INCLUDES ITEMS W/@ S/N 7254063 AND ABOVE
43A#	0601810277	BULB, 18V	1	S/N 7254062 AND BELOW
43-1@	Y0601842542	RESISTOR	1	S/N 7254063 AND ABOVE
58	M1213500704	CONTROL BOX COVER	1	
58-1	0027105015	MACHINE SCREW	4	S/N 7257033 AND ABOVE
59	011106015	HEX. HEAD BOLT	4	REPLACES P/N 0016906015
60	M1213601104	SWITCH BRACKET	1	
61	M1213601204	SWITCH BRACKET	1	
62	0021104035	MACHINE SCREW	4	
62A	OEMAA8	SELF-LOCKING NUT	4	REPLACES P/N 0207004000
63	7538070	MACHINE SCREW	4	REPLACES P/N 0027104015
63A	OEMAA8	SELF-LOCKING NUT	4	REPLACES P/N 0207004000
64	011106015	HEX. HEAD BOLT	8	REPLACES P/N 0016906015
65	M1213602604	SWITCH COVER	1	
66	011106015	HEX. HEAD BOLT	4	REPLACES P/N 0016906015
67	M1213602704	SWITCH COVER	1	
67-1	0317700180	WEATHER STRIP	1	
68	011106015	HEX. HEAD BOLT	4	REPLACES P/N 0016906015
69	M1270100204	SELECTOR SWITCH	1	
69A	M1550003104	DECAL: SELECTOR SWITCH NUMBER	1	
69B	M1550003204	DECAL: SELECTOR SWITCH NUMBER	1	
74	8944001061	RELAY. STARTER	1	REPLACES P/N 0602202502
75	0027105010	MACHINE SCREW	2	
77	8970119490	GLOW PLUG RELAY	1	REPLACES P/N 0602202685
78	0027105010	MACHINE SCREW	2	
79	0601812626	PLUG	1	
80	0601812712	PINS (MALE)	2	
81	M9520000904	DECAL: DIAGNOSTIC SWITCH	1	M92000090
82	M9520001104	DECAL: DIAGNOSTIC BUTTON	1	M92000110
83	M9520002104	DECAL: FUEL PUMP SWITCH	1	M92000210
85	M1247700704	WIRE HARNESS, GENERATOR	1	S/N 7251510 AND BELOW
86	M1247700714	WIRE HARNESS, GENERATOR	1	S/N 7251511 ~ 7257032
86	M1247700724	WIRE HARNESS, GENERATOR	1	S/N 7257033 AND ABOVE
87	M1358201702	WIRE HARNESS, ENGINE	1	S/N 7257032 AND BELOW
87	M1358201712	WIRE HARNESS, ENGINE	1	S/N 7257033 AND ABOVE
88	M1358200302	WIRE HARNESS, CONTROLLER	1	S/N 7256270 AND BELOW
88	M1358200312	WIRE HARNESS, CONTROLLER	1	S/N 7256271 AND ABOVE
89	M1358202204	WIRE HARNESS, PRESSURE SW.	1	S/N 7251216 ~ 7257032
90	8983346930	WIRE HARNESS, PCV HEATER	1	REPLACES P/N 0602044311 S/N 7251216 AND ABOVE
91	0601821370	RECTIFIER	1	REPLACES P/N 0601823240 S/N 7257033 AND ABOVE
92	0027104020	MACHINE SCREW	1	S/N 7257033 AND ABOVE

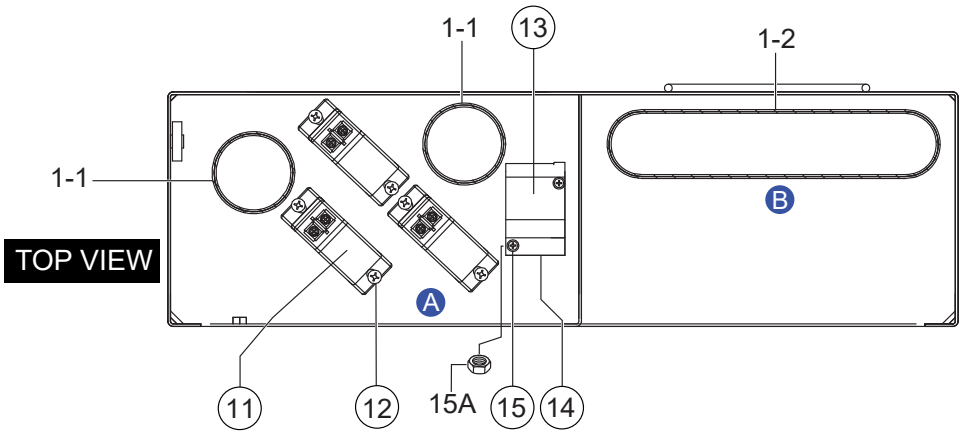
TOP VIEW
1-1
1-1
13
1-2
B
A
11
12
15A
15
14

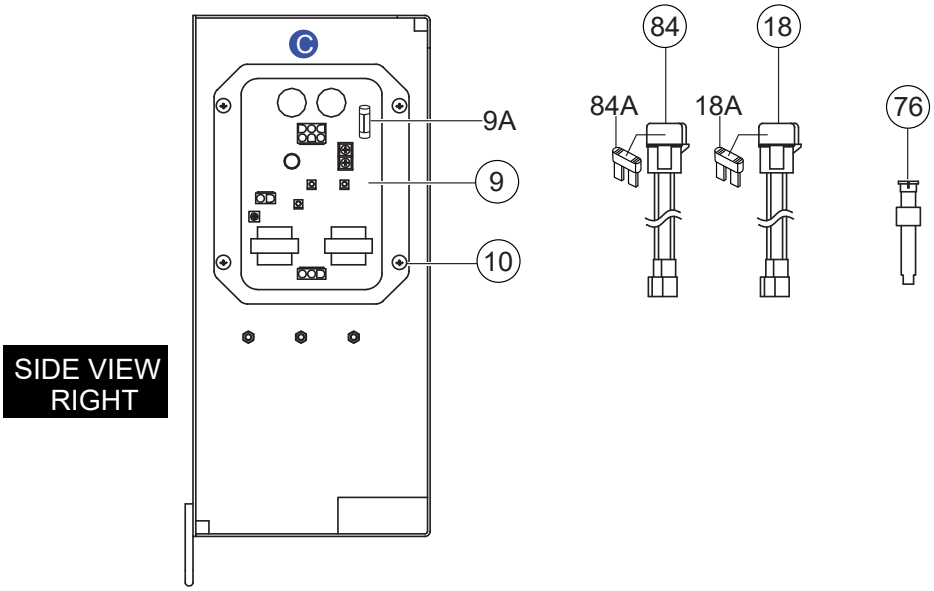
SIDE VIEW
RIGHT
C
9A
9
10
84
84A
18
18A
76

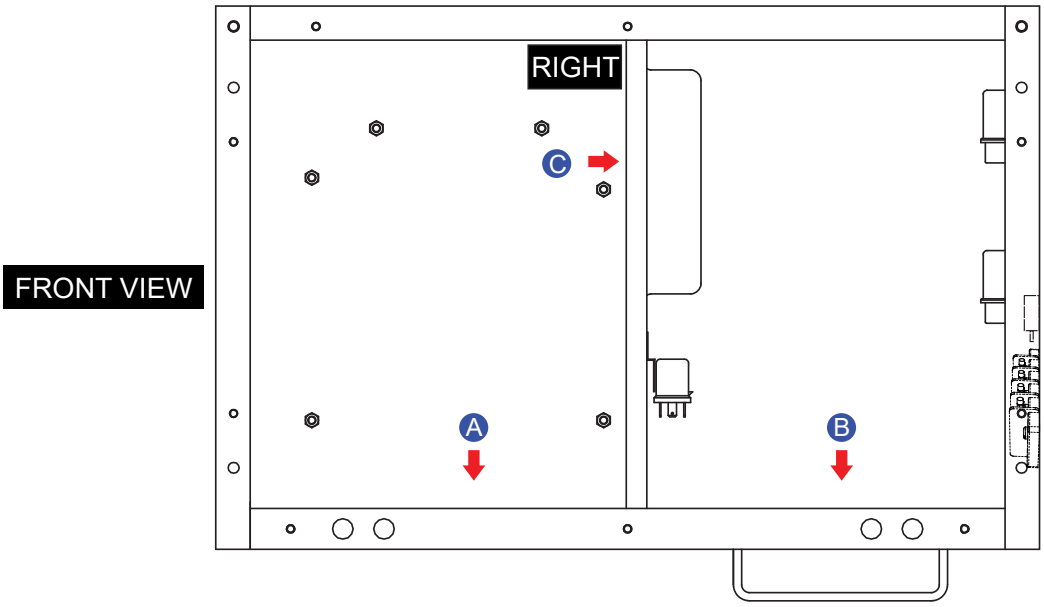
FRONT VIEW
RIGHT
C
A
B

CONTROL BOX 2 ASSY.

NO.	PART NO.	PART NAME	QTY.	REMARKS
1-1	Y0411100205	EDGING	2	
1-2	Y0411100510	EDGING	1	
9	Y0601820608	AUTOMATIC VOLTAGE REGULATOR	1	
9A	Y0601806683	FUSE, 250V, 8A	1	
10	0027105015	MACHINE SCREW	4	
11	Y0601809693	CURRENT TRANSFORMER	3	
12	011808015	MACHINE SCREW	6	REPLACES P/N 0027106015
13	0601820847	OVER CURRENT RELAY	1	S/N 7251510 AND BELOW
13	Y0601820843	OVER CURRENT RELAY	1	S/N 7251511 AND ABOVE
14	0601820848	OVER CURRENT RELAY	1	S/N 7251510 AND BELOW
14	Y0601820844	OVER CURRENT RELAY	1	S/N 7251511 AND ABOVE
15	0027104015	MACHINE SCREW	2	
15A	OEMAA8	SELF-LOCKING NUT	2	REPLACES P/N 0207004000
18	C3558201704	HOLDER, FUSE	1	REPLACES P/N M2357202104
18A	0601806644	FUSE, 30A	1	
76	0601806640	FUSE, 65A	1	
84	M2357202104	HOLDER, FUSE	1	S/N 7251216 AND ABOVE
84A	0601806645	FUSE, 10A	1	S/N 7251216 AND ABOVE

ENGINE AND RADIATOR ASSY.

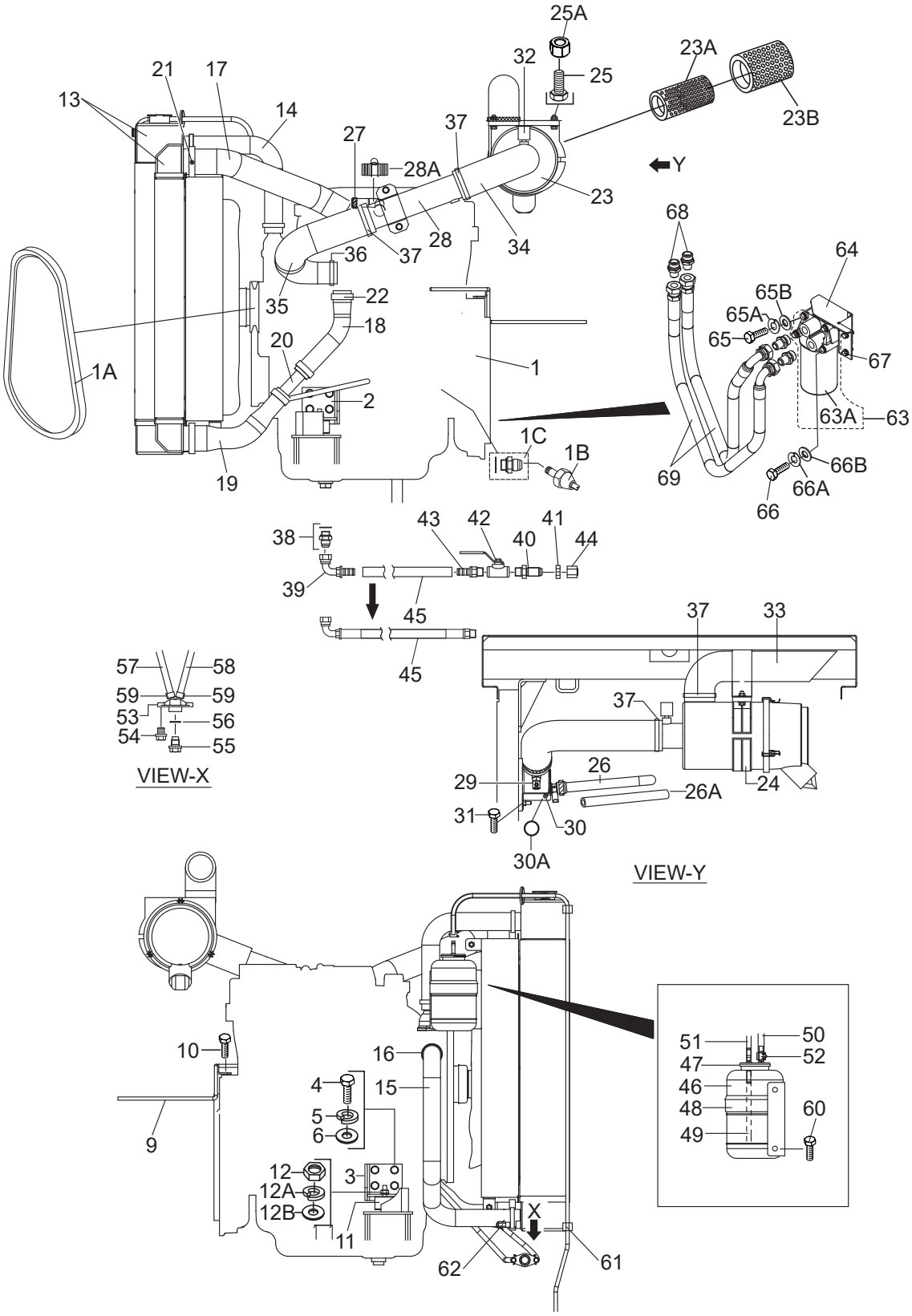

NO.	PART NO.	PART NAME	QTY.	REMARKS
1	M1924200084	ENGINE, ISUZU 4LE2X	1	
1A	8980490340	BELT, COOLING FAN, L950	1	
1B	8983193760	PRESSURE SWITCH	1	REPLACES Y0602210060 S/N 7251216 AND ABOVE
1C	Y0602211629	ADAPTER	1	S/N 7251216 AND ABOVE
2	M1304200004	ENGINE FOOT	1	
3	M1304200104	ENGINE FOOT	1	
4	0105091025	HEX. HEAD BOLT	8	REPLACES P/N 0010310025
5	0040010000	WASHER, LOCK	8	
6	031110160	WASHER, FLAT	8	REPLACES P/N 0041210000
9	M1358300403	CLAMPER ROD	1	
10	012210020	HEX. HEAD BOLT	2	REPLACES P/N 0017110020
11	Y0605000407	RUBBER SUSPENSION	2	
12	0030012000	HEX. NUT	2	
12A	0040012000	WASHER, LOCK	2	
12B	031112230	WASHER, FLAT	2	REPLACES P/N 0041212000
13	Y0602012904	RADIATOR AND INTER-COOLER	1	
14	M1311500603	RADIATOR HOSE, UPPER	1	
15	M1311500703	RADIATOR HOSE, LOWER	1	
16	0605515149	HOSE BAND	4	
17	M1311500803	INTER-COOLER HOSE, UPPER	1	
18	M1311500903	INTER-COOLER HOSE, UPPER/LOWER	1	
19	M1311501003	INTER-COOLER HOSE, LOWER	1	
20	M1311400004	INTER-COOLER PIPE	1	
21	Y0605515300	HOSE BAND	3	
22	Y0605515264	HOSE BAND	3	
23	Y0602046590	AIR CLEANER	1	INCLUDES ITEMS W/#
23A#	PMAF25436	PRIMARY ELEMENT	1	REPLACES P/N 0602046309
23B#	P822769	SAFETY ELEMENT	1	REPLACES P/N 0602046689
24	Y0602040553	AIR CLEANER BAND	1	
25	011208030	HEX. HEAD BOLT	2	REPLACES P/N 0016908030
25A	020108060	SELF-LOCKING-NUT	2	REPLACES P/N 0207008000
26	0269200640	PUSH-LOCK-HOSE	1	S/N 7251215 AND BELOW
26	M1327200104	BLOW-BY HOSE	1	S/N 7251216 AND ABOVE
26A	Y0378100170	AEROFLEX TUBE	1	S/N 7251216 AND ABOVE
27	0605515198	HOSE BAND	2	S/N 7251215 AND BELOW
27	0605515198	HOSE BAND	1	S/N 7251216 AND ABOVE
27	Y0605515321	HOSE BAND	1	S/N 7251216 AND ABOVE
28	M1374000104	AIR CLEANER PIPE	1	S/N 7251215 AND BELOW
28	M13740000113	AIR CLEANER PIPE	1	S/N 7251216 AND ABOVE
28A	Y0602044300	PVC HEATER	1	S/N 7251216 AND ABOVE
29	8121468300	INLET AIR TEMPERATURE SENSOR	1	REPLACES P/N 0603210240
30	M1374200204	BRACKET, AIR CLEANER PIPE	1	S/N 7251215 AND BELOW
30	M1374200214	BRACKET, AIR CLEANER PIPE	1	S/N 7251216 AND ABOVE
30A	Y0222100060	RUBBER SEAL	1	
31	011008020	HEX. HEAD BOLT	2	REPLACES P/N 0016908020
32	0602040651	INDICATOR, AIR CLEANER	1	
33	M1374100703	AIR CLEANER HOSE	1	
34	M1374100503	AIR CLEANER HOSE	1	
35	M1374100603	AIR CLEANER HOSE	1	

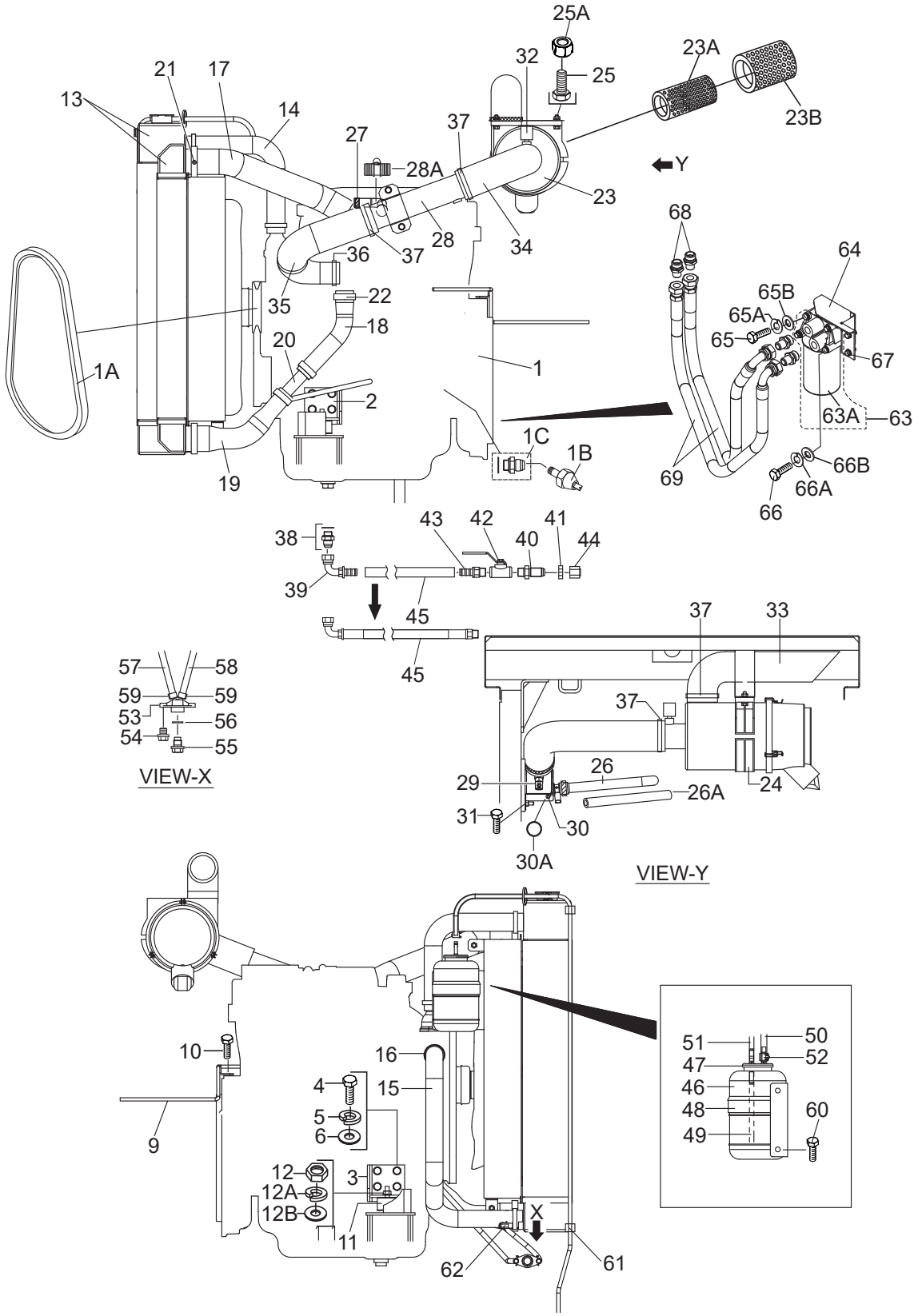
25A
32
25
23A
23B
21
17
13
14
27
37
28A
Y
23
68
64
36
37
28
34
35
22
18
20
1A
1
2
65B
65A
65
67
63A
63
1C
1B
19
69
66B
66A
66
38
43
42
41
40
44
39
45
45
37
33
57
58
59
59
53
56
54
55
VIEW-X
37
26
29
26A
24
31
30
30A
VIEW-Y
10
16
4
15
5
6
9
12
3
12A
12B
11
X
62
61
51
50
47
52
46
48
60
49

NO.	PART NO.	PART NAME	QTY.	REMARKS
36	0605515147	HOSE BAND	1	
37	9500202080	HOSE BAND	4	REPLACES P/N 0605515178
38	0602022581	ADAPTER, 10M 24X2.0	1	
39	0602022561	90º ELBOW	1	S/N 7254242 AND BELOW
40	0603306590	CONNECTOR	1	
41	0603300285	LOCKNUT	1	
42	0605511395	VALVE	1	
43	0603306395	HOSE JOINT	1	S/N 7254242 AND BELOW
44	0602021070	CAP	1	
45	Y0269200490	DRAIN HOSE	1	S/N 7254242 AND BELOW
45	M1321100304	DRAIN HOSE	1	S/N 7254243 AND ABOVE
46	0845031303	RESERVE TANK	1	REPLACES P/N M9300000103
47	0802081104	CAP, RESERVE TANK	1	REPLACES P/N M9300100003
48	M2316100304	BRACKET, RESERVE TANK	1	
49	Y0193600165	HOSE	1	
50	0199900450	OVER FLOW HOSE	1	
51	0193601500	OVER FLOW HOSE	1	
52	0605515189	HOSE BAND	2	
53	1622014103	DRAIN JOINT	1	REPLACES P/N M9602000003
54	011206020	HEX. HEAD BOLT	2	REPLACES P/N 0016906020
55	0802011104	DRAIN BOLT	1	REPLACES P/N M9200200004
56	0150000018	O-RING	1	
57	Y0199900440	DRAIN HOSE	1	
58	Y0199901310	DRAIN HOSE	1	
59	0605515189	HOSE BAND	4	
60	011008020	HEX. HEAD BOLT	2	REPLACES P/N 0016908020
61	0602220911	CLAMP	2	
62	Y0605512183	HOSE JOINT	1	
63	8980756710	OIL FILTER ASSY.	1	REPLACES P/N 0602041008
63A	8980756761	ELEMENT, OIL FILTER	1	
64	M1324400004	BRACKET, OIL FILTER	1	
65	Y0010108090	HEX. HEAD BOLT	2	
65A	0040008000	WASHER, LOCK	2	
65B	0401450080	WASHER, FLAT	2	REPLACES P/N 0041208000
66	Y0010108110	HEX. HEAD BOLT	2	
66A	Y0040008000	WASHER, LOCK	2	
66B	Y0041208000	WASHER, FLAT	2	
67	011208025	HEX. HEAD BOLT	2	REPLACES P/N 0016908025
68	Y0602022534	STRAIGHT ADAPTER	4	
69	M1324300004	OIL FILTER HOSE	2	

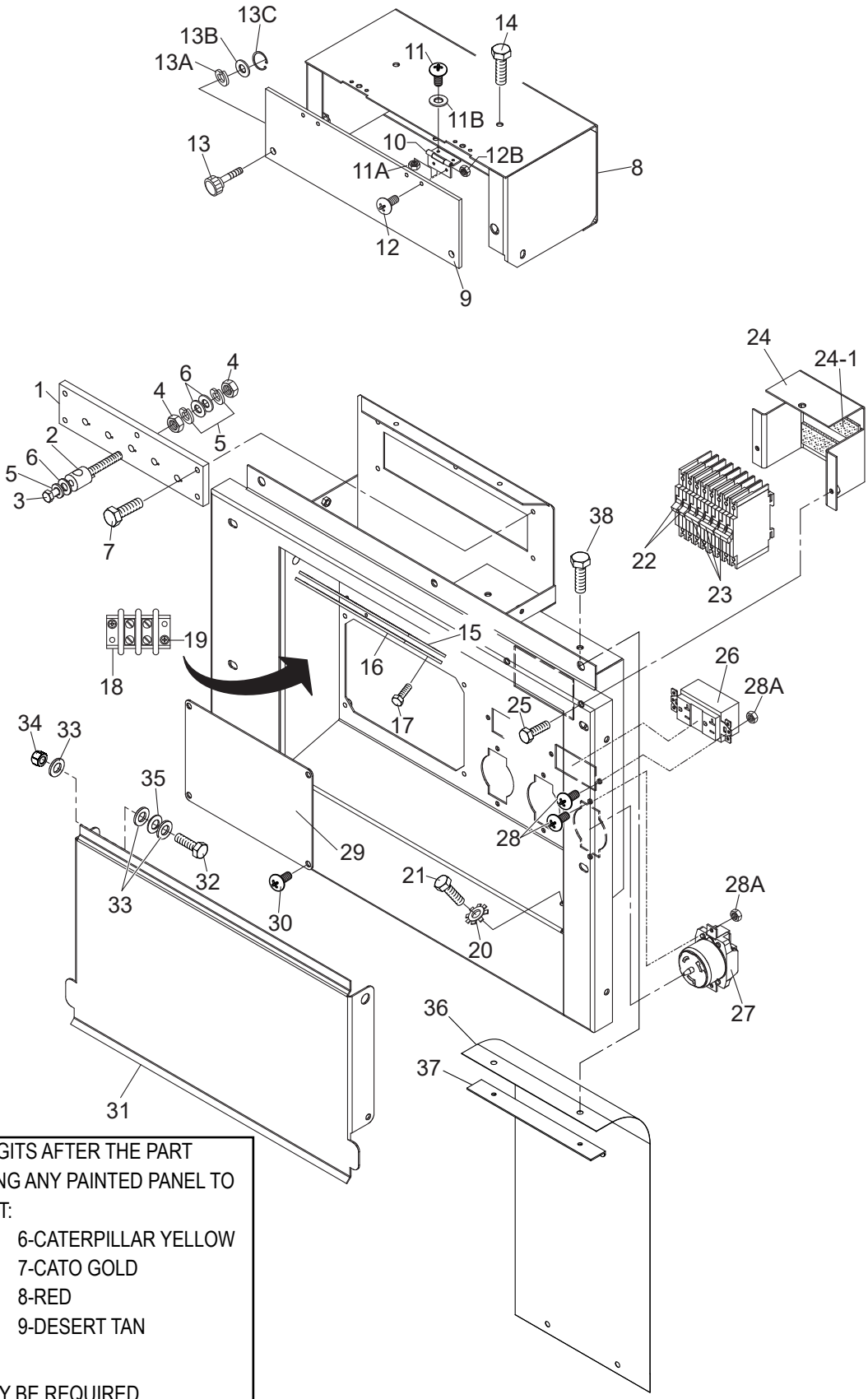

ADD THE FOLLOWING DIGITS AFTER THE PART NUMBER WHEN ORDERING ANY PAINTED PANEL TO INDICATE COLOR OF UNIT:

1-ORANGE	6-CATERPILLAR YELLOW
2-WHITE	7-CATO GOLD
3-SPECTRUM GREY	8-RED
4-SUNBELT GREEN	9-DESERT TAN
5-BLACK	

THE SERIAL NUMBER MAY BE REQUIRED.

OUTPUT TERMINAL ASSY.

NO.	PART NO.	PART NAME	QTY.	REMARKS
1	8111860303	TERMINAL PANEL	1	REPLACES P/N M1230700103
2	0801831704A	OUTPUT TERMINAL BOLT	5	REPLACES P/N M9220100204
3	012210020	TIE BOLT	5	REPLACES P/N M9220100104
4	0039310000	HEX. NUT	10	
5	0040010000	WASHER, LOCK	15	
6	0041410000	WASHER, FLAT	20	
7	011208025	HEX. HEAD BOLT	5	REPLACES P/N 0016908025
8	M1237100303	3-PHASE OUTPUT TERMINAL COVER	1	
9	M1236100704	OUTPUT WINDOW	1	
10	0605010040	HINGE	2	
11	0027103010	MACHINE SCREW	4	
11A	0207003000	HEX. NUT	4	REPLACES P/N 0030003000
11B	0041203000	WASHER, LOCK	4	
12	0027103010	MACHINE SCREW	4	
12A	0207003000	HEX. NUT	4	REPLACES P/N 0030003000
13	M9220100804	SET SCREW	2	
13A	0040006000	WASHER, LOCK	2	
13B	952404470	WASHER, FLAT	2	REPLACES P/N 0041206000
13C	0080200005	E-SNAP RING	2	
14	011106015	HEX. HEAD BOLT	4	REPLACES P/N 0016906015
15	M1236400004	CABLE OUTLET COVER	1	
16	M1236300004	SUPPORTER, CABLE OUTLET COVER	1	
17	011206020	HEX. HEAD BOLT	6	REPLACES P/N 0016906020
18	0601815194	TERMINAL BLOCK, 601-GP-02	1	S/N 7255491 AND BELOW S/N 7255523 ~ 7255564
18	Y0601816539	TERMINAL BLOCK, TB200-02	1	S/N 7255492 ~ 7255522 S/N 7255565 ~ 7255575 S/N 7255608 ~ 7256140
18	0601815870	TERMINAL BLOCK, KT-20-2P	1	S/N 7255576 ~ 7255607 S/N 7256141 AND ABOVE
19	7538070	MACHINE SCREW	2	REPLACES P/N 0027104015
20	0040508000	TOOTHED WASHER	1	
21	0019208020	HEX. HEAD BOLT	1	
22	0601870440	CIRCUIT BREAKER, 1P 20A	2	S/N 7250445 AND BELOW
22	0601808803	CIRCUIT BREAKER, 1P 20A	2	S/N 7250446 AND ABOVE
23	0601870441	CIRCUIT BREAKER, 2P 50A	3	S/N 7250445 AND BELOW
23	0601808804	CIRCUIT BREAKER, 2P 50A	3	S/N 7250446 AND ABOVE
24	M1260700504	BREAKER FITTING COVER	1	S/N 7250445 AND BELOW
24	M1260700304	BREAKER FITTING COVER	1	S/N 7250446 AND ABOVE
24-1	Y0222100105	CUSHION RUBBER	2	S/N 7250445 AND BELOW
24-1	Y0222100150	CUSHION RUBBER	2	S/N 7250446 AND ABOVE
25	011206020	HEX. HEAD BOLT	2	REPLACES P/N 0016906020
26	Y0601814034	RECEPTACLE, 125V 20A	2	
27	Y0601814014	RECEPTACLE, 250V 50A	3	
28	7538070	MACHINE SCREW	8	REPLACES P/N 0027104015
28A	OEMAA8	HEX. NUT	8	REPLACES P/N 0207004000

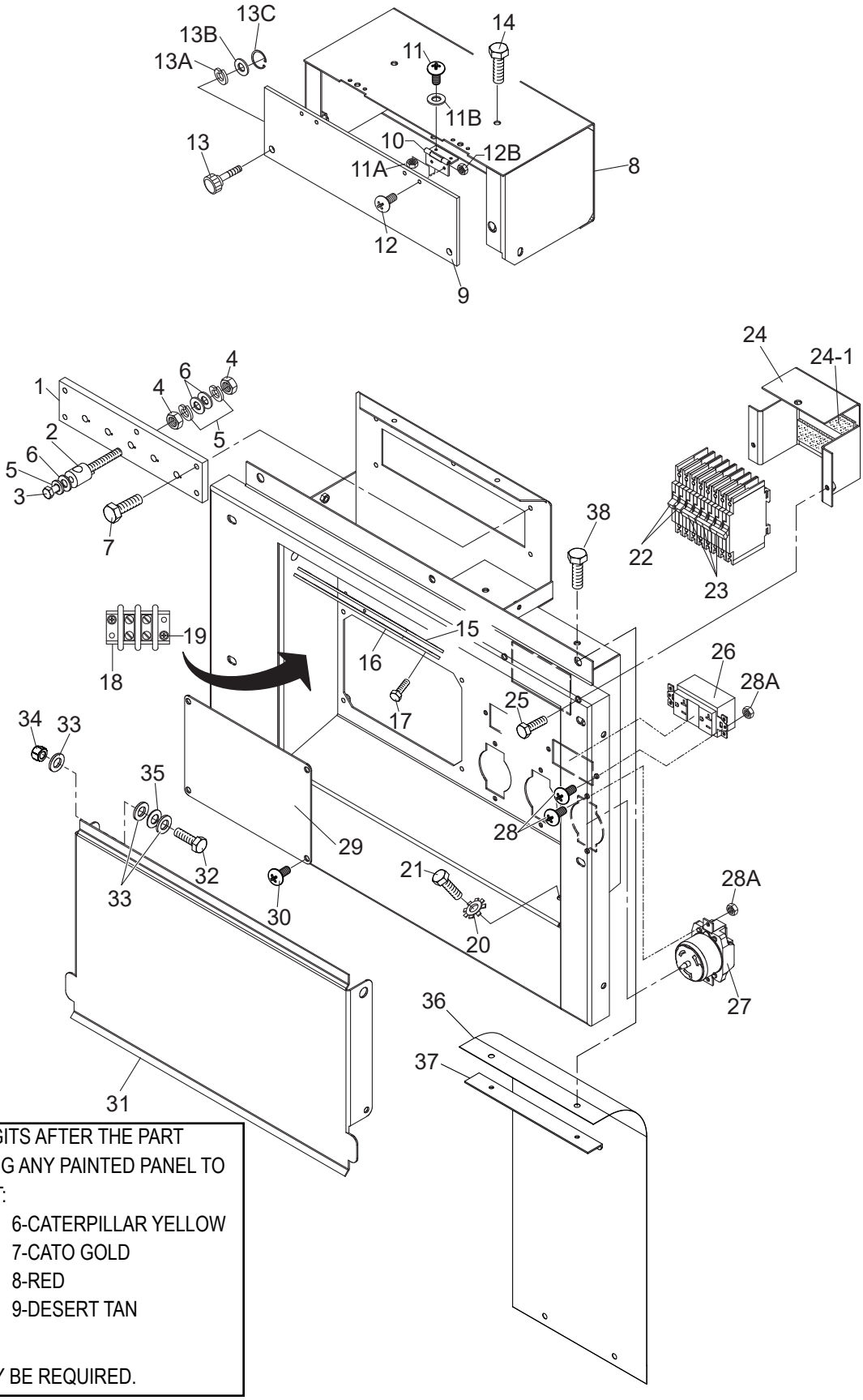

ADD THE FOLLOWING DIGITS AFTER THE PART NUMBER WHEN ORDERING ANY PAINTED PANEL TO INDICATE COLOR OF UNIT:

1-ORANGE	6-CATERPILLAR YELLOW
2-WHITE	7-CATO GOLD
3-SPECTRUM GREY	8-RED
4-SUNBELT GREEN	9-DESERT TAN
5-BLACK	

THE SERIAL NUMBER MAY BE REQUIRED.

NO.	PART NO.	PART NAME	QTY.	REMARKS
29	M1236400104	COVER	1	
30	011106015	HEX. HEAD BOLT	4	REPLACES P/N 0016906015
31	M1237100203	TERMINAL COVER	1	
32	012212045	HEX. HEAD BOLT	2	REPLACES P/N 0010112045
33	031112230	WASHER, FLAT	6	REPLACES P/N 0041212000
34	0030012000	HEX. NUT DOUBLE NUT	2	
35	0605050060	CONICAL WASHER, LOCK	2	
36	M4236100604	INSULATING COVER	1	S/N 7254782 AND BELOW
36	M1237101204	INSULATING COVER	1	S/N 7254783 AND ABOVE
37	M1236400304	SUPPORTER, INSULATING COVER	1	
38	0016906015	HEX. HEAD BOLT	2	

NOTES:

1 FOR S/N 7259598 AND BELOW.

2 FOR S/N 7259599 AND ABOVE.

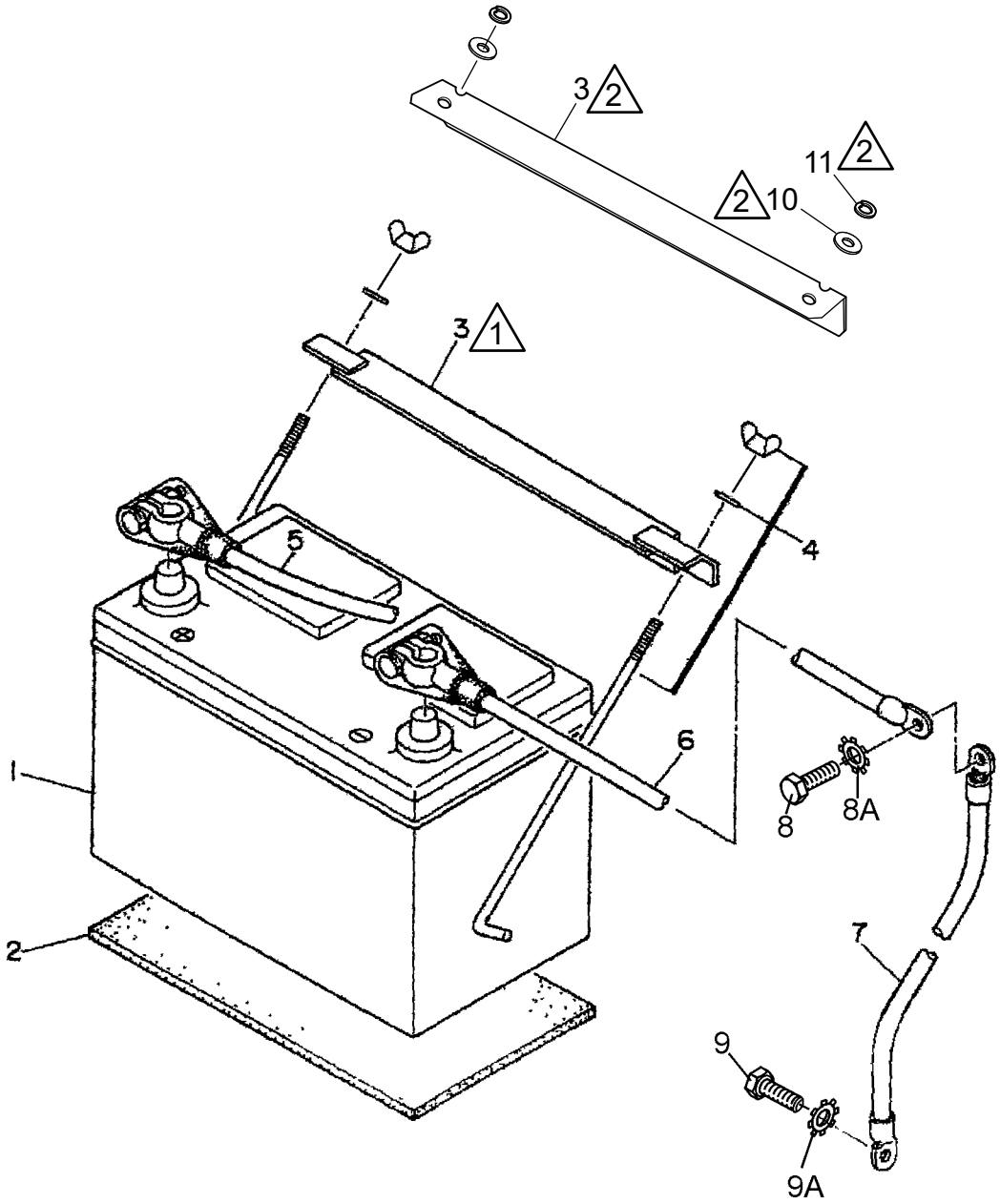

NO.	PART NO.	PART NAME	QTY.	REMARKS
1	0602220199	BATTERY	1	S/N 7254987 AND BELOW
1	Y0602221291	BATTERY	1	S/N 7254988 ~ 7255225
1	0602220199	BATTERY	1	S/N 7255226 AND ABOVE
2	M9310500014	BATTERY SHEET	1	
3	M9103000304	BATTERY BAND	1	S/N 7259598 AND BELOW
3	M9103000904	BATTERY BAND	1	S/N 7259599 AND ABOVE
4	0602220920	BATTERY BOLT SET	2	
5	M2346900204	BATTERY CABLE	1	
6	M2346900304	BATTERY CABLE	1	
7		CABLE	1	MAKE LOCALLY
8	0017112025	HEX. HEAD BOLT	1	
8A	0040512000	TOOTHED WASHER	1	
9	011208025	HEX. HEAD BOLT	1	REPLACES P/N 0016908025
9A	0040508000	TOOTHED WASHER	1	
10	0401450080	WASHER, FLAT	2	REPLACES P/N 0041208000 S/N 7259599 AND ABOVE
11	0040008000	WASHER, LOCK	2	S/N 7259599 AND ABOVE

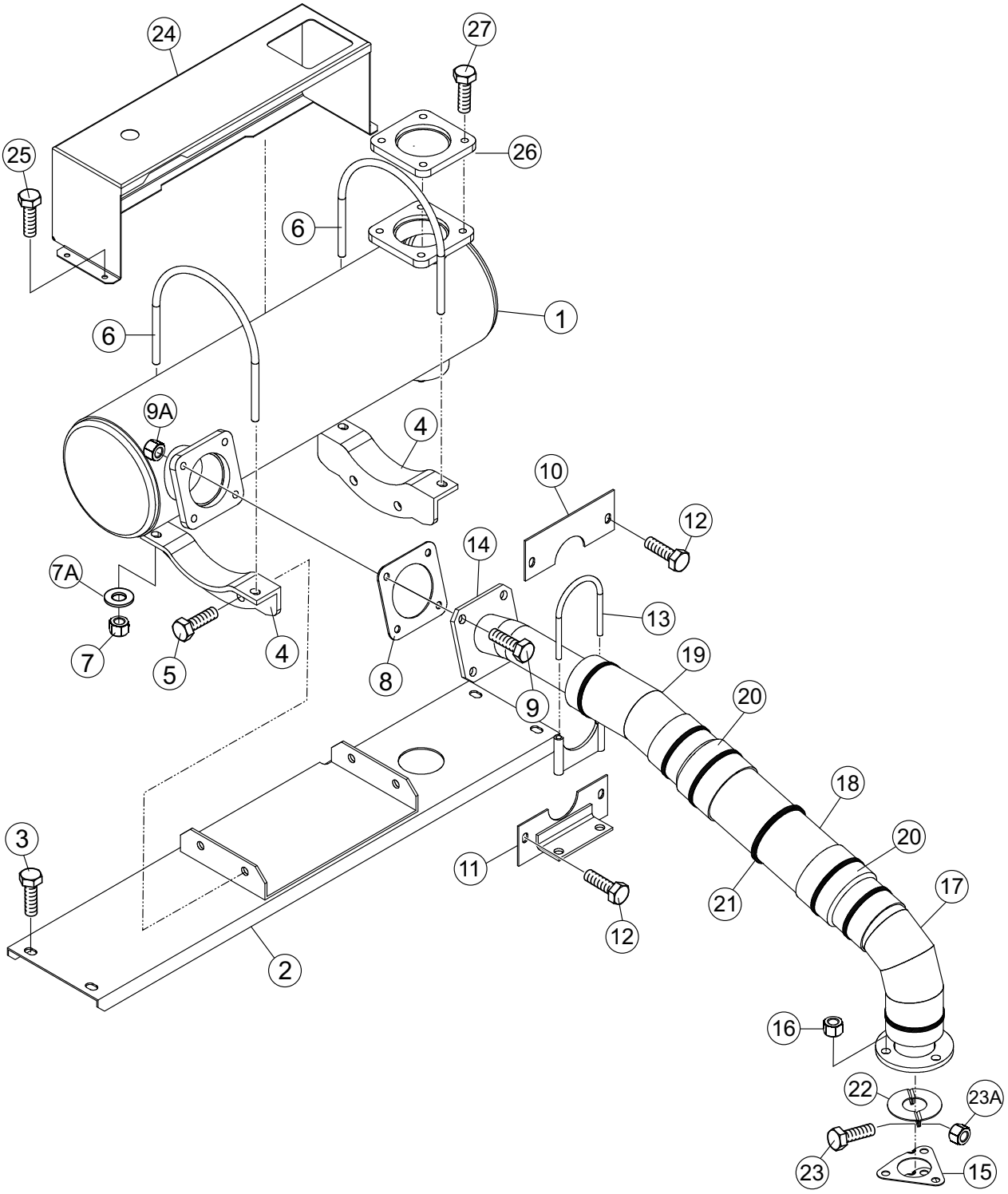
24
27
25
26
6
6
1
9A
4
10
12
14
7A
13
7
5
4
8
19
9
20
18
3
20
11
17
21
12
2
16
22
23A
23
15

NO.	PART NO.	PART NAME	QTY.	REMARKS
1	8982353890	DOC, MUFFLER	1	REPLACES P/N Y0602330111
2	M1331400403	DOC, BRACKET	1	
3	011008020	HEX. HEAD BOLT	4	REPLACES P/N 0016908020
4	8982284330	DOC, SUPPORT	2	REPLACES P/N Y602330210
5	0016910025	HEX. HEAD BOLT	4	
6	8982103230	U-BOLT	2	REPLACES P/N Y0602322091
7	020108060	SELF-LOCKING NUT	4	REPLACES P/N 0037908000
7A	0401450080	WASHER, FLAT	4	REPLACES P/N 0041208000
8	8973731080	GASKET	1	REPLACES P/N Y0602320212
9	8980435280	HEX. HEAD BOLT	4	REPLACES P/N Y0602322090
9A	8971616070	HEX. NUT	4	REPLACES P/N Y0602323007
10	M1331400204	COVER, EXHAUST PIPE	1	
11	M1331400304	BRACKET, EXHAUST PIPE	1	
12	011106015	HEX. HEAD BOLT	4	REPLACES P/N 0016906015
13	Y0602326066	U-BOLT	1	
14	M1334000803	EXHAUST PIPE	1	
15	8973679180	GASKET	1	REPLACES P/N Y0602320211
16	0207108000	SELF-LOCKING NUT	3	
17	M1331400604	EXHAUST HEAT SHIELD	1	
18	M1331400704	EXHAUST HEAT SHIELD	1	
19	M1331400804	EXHAUST HEAT SHIELD	1	
20	Y0272100370	HEAT SHIELD TAPE	2	
21	Y0602325051	METAL CABLE TIE	8	
22	M1334300404	HEAT SHIELD STOPPER	2	
23	0019206015	HEX HEAD BOLT	2	
23A	0176060030	SELF-LOCKING NUT	2	REPLACES P/N 0207006000
24	M1331300004	DOC COVER	1	
25	011008020	HEX HEAD BOLT	4	REPLACES P/N 0016908020
26	M1334300504	FLANGE	1	S/N 7250321 AND ABOVE
27	011008020	HEX HEAD BOLT	4	REPLACES P/N 0016908020 S/N 7250321 AND ABOVE

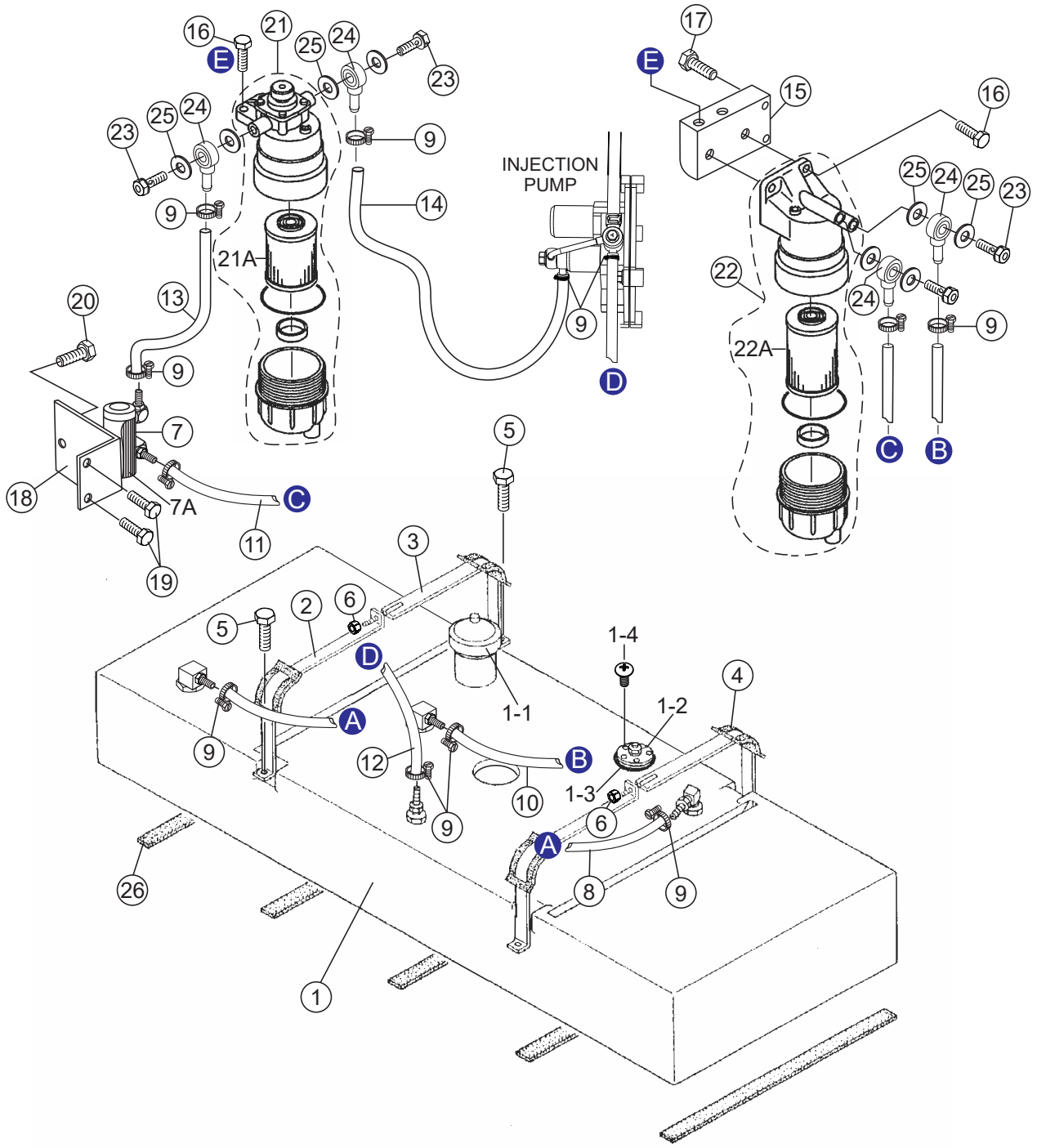
INJECTION PUMP
21A
22A
7A
1-1
1-2
1-3
1-4

NO.	PART NO.	PART NAME	QTY.	REMARKS
1	M1364000202	FUEL TANK	1	INCLUDES ITEMS W/#
1-1#	0605505070	FUEL TANK CAP	1	
1-2#	Y0605501056	FUEL SENDER UNIT	1	S/N 7256544 AND BELOW
1-2#	Y0605501046	FUEL SENDER UNIT	1	S/N 7256545 AND ABOVE
1-3#	0605516090	GASKET	1	S/N 7256544 AND BELOW
1-3#	Y0605516092	GASKET	1	S/N 7256545 AND ABOVE
1-4#	Y0605053030	MACHINE SCREW	5	S/N 7256544 AND BELOW
1-4#	Y0605053040	MACHINE SCREW	5	S/N 7256545 AND ABOVE
2	M1364200004	TANK BAND	2	
3	M1363200404	TANK BAND	2	
4	M9310500104	SUPPORTER SHEET	4	
5	011008020	HEX. HEAD BOLT	4	REPLACES P/N 0016908020
6	Y0207008000	SELF-LOCKING NUT	4	
7	8980682750	FUEL FEED PUMP	1	REPLACES P/N 0602023240
7A	8980714010	FUEL FILTER, FEED PUMP	1	
8	0191301150	VENT HOSE	1	
9	Y0605515189	HOSE BAND	12	S/N 7256544 AND BELOW
9	Y0605515361	HOSE CLIP	12	S/N 7256545 AND ABOVE
10	0191300950	SUCTION HOSE	1	
11	0191300550	SUCTION HOSE	1	
12	0191301100	RETURN HOSE	1	
13	0191300260	SUCTION HOSE	1	
14	0191300530	SUCTION HOSE	1	
15	M1484500204	FUEL FILTER BRACKET	1	
16	012210035	HEX. HEAD BOLT	4	REPLACES P/N 0017110035
17	0016910030	HEX. HEAD BOLT	2	
18	M1366700304	FUEL PUMP BRACKET	1	
19	011008020	HEX. HEAD BOLT	2	REPLACES P/N 0016908020
20	011606025	HEX. HEAD BOLT	2	REPLACES P/N 0016906025
21	8982369900	FUEL FILTER, MAIN ASSY.	1	REPLACES P/N 0602042428
21A	8982402800	ELEMENT, FUEL FILTER, MAIN	1	
22	8982369910	FUEL FILTER, PRE. ASSY.	1	REPLACES P/N 0602042429
22A	8982402790	ELEMENT, FUEL FILTER. PRE.	1	
23	1096751930	EYE BOLT	4	REPLACES P/N Y0602042624
24	8981263320	JOINT PIPE	4	REPLACES P/N Y0602042623
25	1096300850	PACKING	8	REPLACES P/N Y0602021700
26	0222100700	TANK SHEET	5	

ADD THE FOLLOWING DIGITS AFTER THE PART NUMBER WHEN ORDERING ANY PAINTED PANEL TO INDICATE COLOR OF UNIT:

1-ORANGE	6-CATERPILLAR YELLOW
2-WHITE	7-CATO GOLD
3-SPECTRUM GREY	8-RED
4-SUNBELT GREEN	9-DESERT TAN
5-BLACK	

THE SERIAL NUMBER MAY BE REQUIRED.

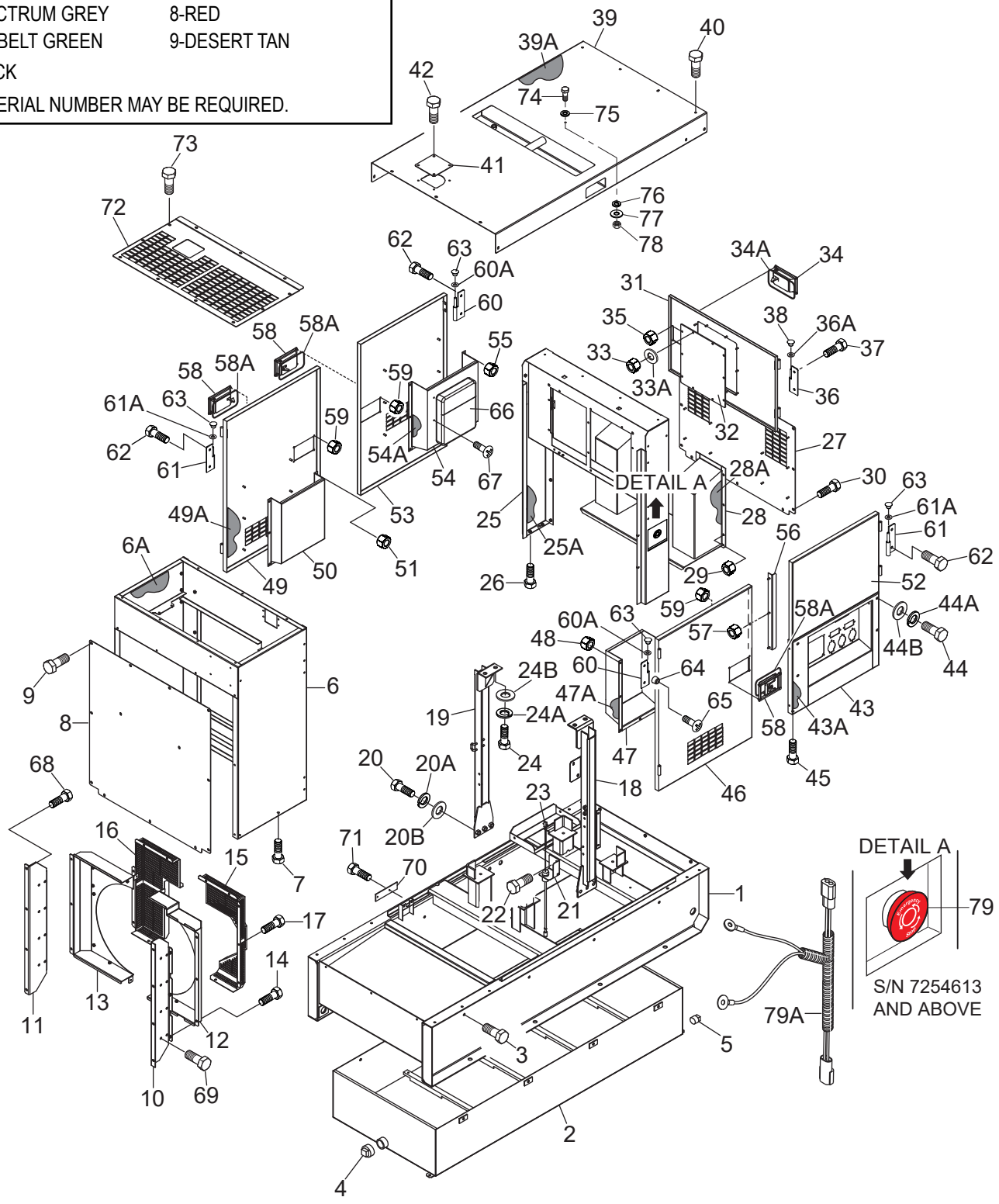

NO.	PART NO.	PART NAME	QTY.	REMARKS
1	M1414000602	BASE	1	
2	M1414800003	ENVIRONMENTAL TANK	1	
3	0016910030	HEX. HEAD BOLT	8	
4	0603306797	SQUARE HEAD PIPE PLUG 1-1/2"	1	
5	Y0603306793	SQUARE HEAD PIPE PLUG 1/2"	1	S/N 7252305 AND BELOW
6	M1424000702	FRONT FRAME	1	S/N 7252840 AND BELOW
6	M1424000712	FRONT FRAME	1	S/N 7252841 AND ABOVE
6A	M1494101903	ACOUSTIC SHEET	1	
7	011008020	HEX. HEAD BOLT	6	REPLACES P/N 0016908020
8	M1424201004	COVER, FRONT FRAME	1	
8A	M1494102004	ACOUSTIC SHEET	1	
9	0019208020	HEX. HEAD BOLT	13	
10	M1311200604	RADIATOR BRACKET	1	S/N 7251510 AND BELOW
10	M1311200614	RADIATOR BRACKET	1	S/N 7251511 AND ABOVE
11	M1311200704	RADIATOR BRACKET	1	
12	M1311300503	FAN SHROUD	1	S/N 7251510 AND BELOW
12	M1311300513	FAN SHROUD	1	S/N 7251511 AND ABOVE
13	M1311300603	FAN SHROUD	1	
14	011008020	HEX. HEAD BOLT	8	REPLACES P/N 0016908020
15	M1311300703	FAN GUARD	1	
16	M1311300803	FAN GUARD	1	
17	011008020	HEX. HEAD BOLT	11	REPLACES P/N 0016908020
18	M1434000203	CENTER FRAME	1	
19	M1434000303	CENTER FRAME	1	
20	0013616040	HEX. HEAD BOLT	6	
20A	0040016000	WASHER, LOCK	6	
20B	0041216000	WASHER, FLAT	6	
21	M1414800404	FUEL LEAK SWITCH BRACKET	1	
22	011008020	HEX. HEAD BOLT	2	REPLACES P/N 0016908020
23	0605503062	FUEL LEAK DETECTED SWITCH	1	
24	0013616040	HEX. HEAD BOLT	4	
24A	0040016000	WASHER, LOCK	4	
24B	0041216000	WASHER, FLAT	4	
25	M1444000302	REAR FRAME	1	S/N 7254612 AND BELOW
25	M1444000312	REAR FRAME	1	S/N 7254613 AND ABOVE
25A	M1494301204	ACOUSTIC SHEET	2	S/N 7254612 AND BELOW
25A	M1494304604	ACOUSTIC SHEET	2	S/N 7254613 AND ABOVE
26	011008020	HEX. HEAD BOLT	4	REPLACES P/N 0016908020
27	M1444300203	REAR COVER	1	S/N 7250165 AND BELOW
27	M1444300213	REAR COVER	1	S/N 7250166 AND ABOVE
28	M1444300303	DUCT, REAR COVER	1	S/N 7250165 AND BELOW
28	M1444300313	DUCT, REAR COVER	1	S/N 7250166 AND ABOVE
28A	M1494301303	ACOUSTIC SHEET	1	S/N 7250165 AND BELOW
28A	M1494301313	ACOUSTIC SHEET	1	S/N 7250166 AND ABOVE
29	0176060030	SELF-LOCKING NUT	12	REPLACES P/N 0207006000
30	0019208020	HEX. HEAD BOLT	10	
31	M1444200203	REAR DOOR	1	
32	M1445600204	WINDOW PLATE	1	

ADD THE FOLLOWING DIGITS AFTER THE PART NUMBER WHEN ORDERING ANY PAINTED PANEL TO INDICATE COLOR OF UNIT:

1-ORANGE	6-CATERPILLAR YELLOW
2-WHITE	7-CATO GOLD
3-SPECTRUM GREY	8-RED
4-SUNBELT GREEN	9-DESERT TAN
5-BLACK	

THE SERIAL NUMBER MAY BE REQUIRED.

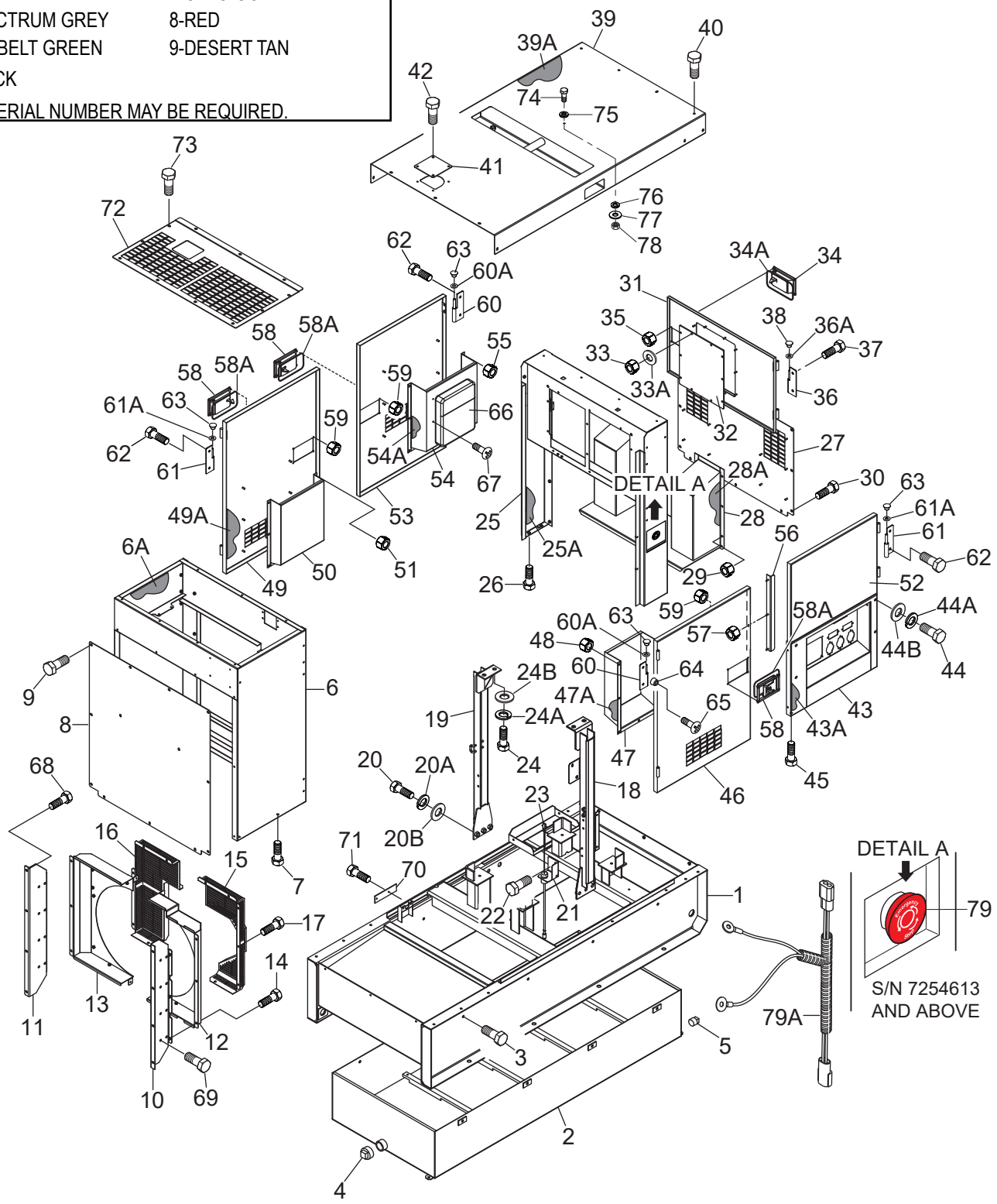

NO.	PART NO.	PART NAME	QTY.	REMARKS
33	020106050	LOCK NUT	10	REPLACES P/N 0037906000
33A	952404470	WASHER, FLAT	10	REPLACES P/N 0041206000
34	Y0605012309	DOOR HANDLE ASSY.	1	
34A	C9312500004	SEAL RUBBER	1	
35	Y0207006000	SELF-LOCKING NUT	4	
36	M9110100204	HINGE, MALE(L)	2	
36A	M9116100004	WASHER	2	
37	0019208020	HEX. HEAD BOLT	3	
38	0845031504	BLIND PLUG	2	REPLACES P/N M9310000004
39	M1464000202	ROOF PANEL	1	S/N 7252840 AND BELOW
39	M1464000212	ROOF PANEL	1	S/N 7252841 AND ABOVE
39A	M1494500803	ACOUSTIC SHEET	1	
40	0019208020	HEX. HEAD BOLT	19	S/N 7252840 AND BELOW
40	0019208020	HEX. HEAD BOLT	13	S/N 7252841 AND ABOVE
41	M3310600004	COVER	1	
42	0019208020	HEX. HEAD BOLT	4	
43	M1454200402	SPLASHER PANEL	1	S/N 7250445 AND BELOW
43	M1454200412	SPLASHER PANEL	1	S/N 7250446 ~ 7255575 S/N 7255608 ~ 7256140
43	M1454201802	SPLASHER PANEL	1	S/N 7255576 ~ 7255607 S/N 7256141 AND ABOVE
43A	M1494401304	ACOUSTIC SHEET	1	
44	0019108055	HEX. HEAD BOLT	4	
44A	0042308000	WASHER, LOCK	4	
44B	031108160	WASHER, FLAT	4	REPLACES P/N 0042408000
45	011008020	HEX. HEAD BOLT	2	REPLACES P/N 0016908020
46	M1454001003	SIDE DOOR	1	
46A	M1494401404	ACOUSTIC SHEET	1	
47	M1454300404	DUCT	1	
47A	M1494401904	ACOUSTIC SHEET	1	
48	0176060030	SELF-LOCKING NUT	7	REPLACES P/N 0207006000
49	M1454001103	SIDE DOOR	1	
49A	M1494401504	ACOUSTIC SHEET	1	
50	M1454300604	DUCT	1	
50A	M1494402104	ACOUSTIC SHEET	1	
51	0176060030	SELF-LOCKING NUT	7	REPLACES P/N 0207006000
52	M1454001203	SIDE DOOR	1	
52A	M1494401604	ACOUSTIC SHEET	1	
53	M1454001303	SIDE DOOR	1	
53A	M1494401703	ACOUSTIC SHEET	1	
54	M1454300703	DUCT	1	
54A	M1494402204	ACOUSTIC SHEET	1	
55	0176060030	SELF-LOCKING NUT	7	REPLACES P/N 0207006000
56	M1454700104	DOOR SUPPORTER	1	
56A	Y0229200480	RUBBER SEAL	1	
57	0176060030	SELF-LOCKING NUT	3	REPLACES P/N 0207006000
58	Y0605012309	DOOR HANDLE ASSY.	3	
58A	C9312500004	SEAL RUBBER	3	

ADD THE FOLLOWING DIGITS AFTER THE PART NUMBER WHEN ORDERING ANY PAINTED PANEL TO INDICATE COLOR OF UNIT:

1-ORANGE	6-CATERPILLAR YELLOW
2-WHITE	7-CATO GOLD
3-SPECTRUM GREY	8-RED
4-SUNBELT GREEN	9-DESERT TAN
5-BLACK	

THE SERIAL NUMBER MAY BE REQUIRED.

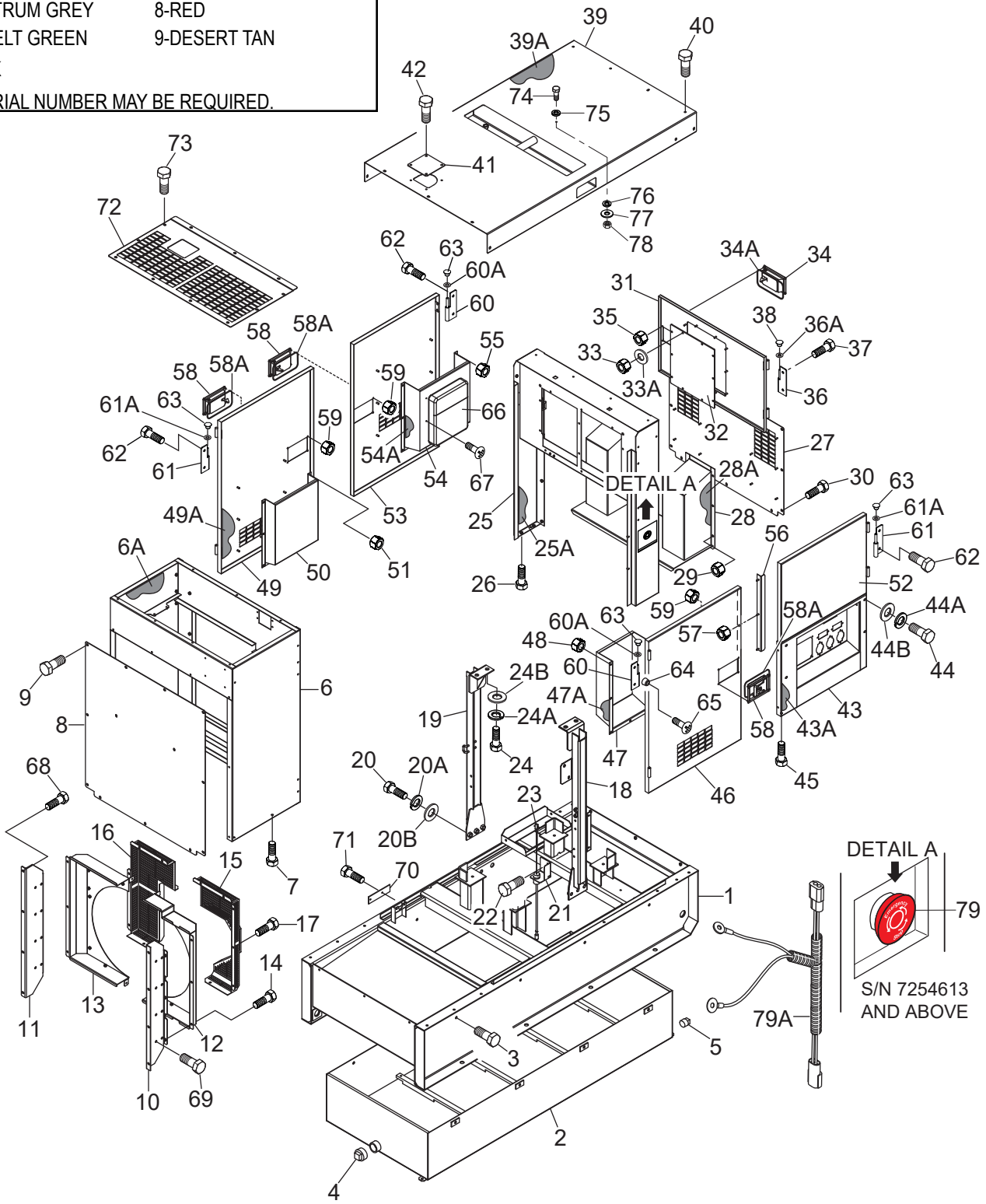

NO.	PART NO.	PART NAME	QTY.	REMARKS
59	0176060030	SELF-LOCKING NUT	12	REPLACES P/N 0207006000
60	M9110100204	HINGE, MALE (L)	4	
60A	M9116100004	WASHER	4	
61	M9110100304	HINGE, MALE (R)	4	
61A	M9116100004	WASHER	4	
62	0019208020	HEX. HEAD BOLT	9	
63	0845031504	BLIND PLUG	8	REPLACES P/N M9310000004
64	0601850097	DOOR STOPPER	8	
65	0027208025	MACHINE SCREW	8	
66	0600800320	MANUAL HOLDER	1	
67	0027106016	MACHINE SCREW	4	REPLACES P/N 0021806015
68	011008020	HEX. HEAD BOLT	8	REPLACES P/N 0016908020
69	011008020	HEX. HEAD BOLT	16	REPLACES P/N 0016908020
70	M2414800304	HOLE COVER (BASE)	1	S/N 7252361 AND ABOVE
71	011008020	HEX HEAD BOLT	2	REPLACES P/N 0016908020 S/N 7252361 AND ABOVE
72	M1424100004	FRONT FRAME OVER COVER	1	S/N 7252841 AND ABOVE
73	011008020	HEX HEAD BOLT	8	REPLACES P/N 0016908020 S/N 7252841 AND ABOVE
74	Y0019112030	HEX. HEAD BOLT	1	S/N 7254243 AND ABOVE
75	Y0605050040	SEALING WASHER	1	S/N 7254243 AND ABOVE
76	0040012000	WASHER, LOCK	1	S/N 7254243 AND ABOVE
77	031112230	WASHER, FLAT	1	REPLACES P/N 0041212000 S/N 7254243 AND ABOVE
78	0030012000	HEX. HEAD NUT	1	S/N 7254243 AND ABOVE
79	Y0601831953	EMERGENCY STOP BUTTON	1	S/N 7254613 AND ABOVE
79A	M1358203104	WIRE HARNESS, E-STOP	1	S/N 7254613 ~ 7257032

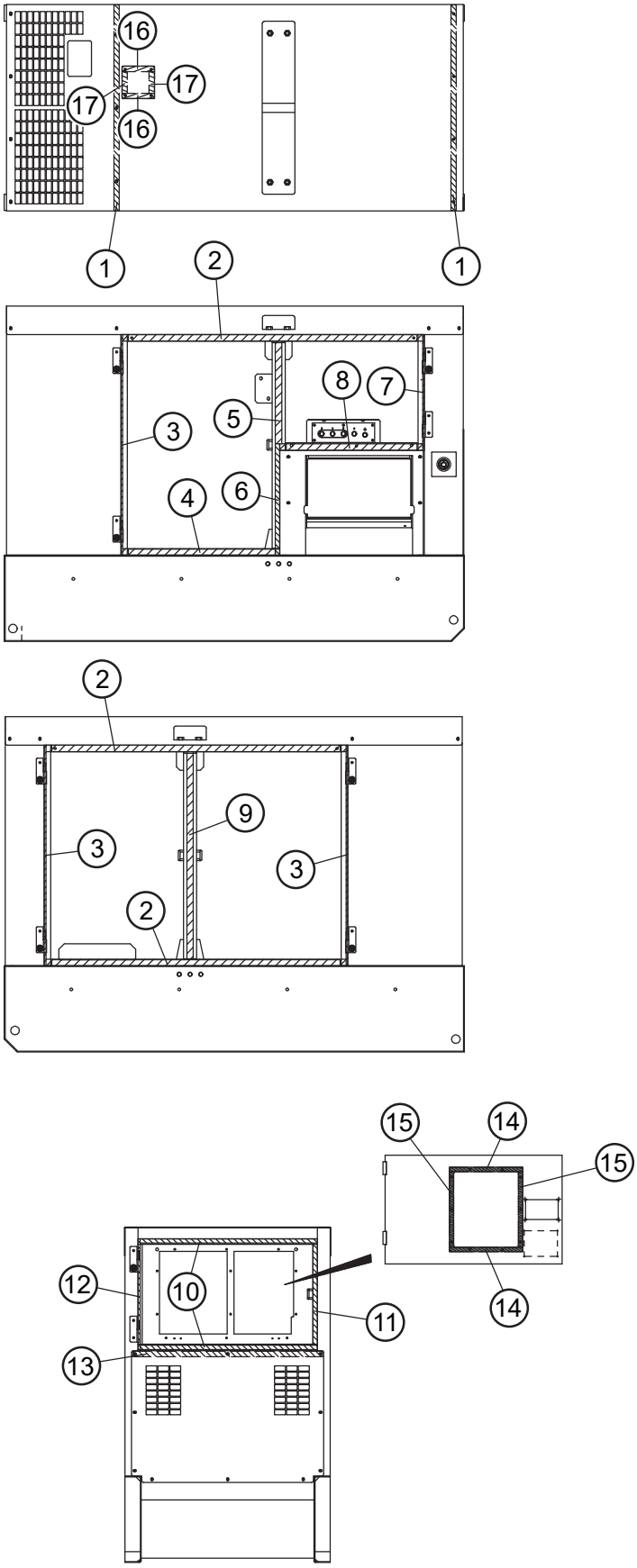
16
17
17
16
1
2
1
8
7
5
3
4
6
2
9
3
3
2
15
14
15
12
10
11
14
13

NO.	PART NO.	PART NAME	QTY.	REMARKS
1	0229200950	RUBBER SEAL	2	
2	0228901390	RUBBER SEAL	3	
3	Y0229401020	RUBBER SEAL	3	
4	Y0228900705	RUBBER SEAL	1	
5	0228900475	RUBBER SEAL	1	
6	0228800515	RUBBER SEAL	1	
7	Y0229400535	RUBBER SEAL	1	
8	0228900660	RUBBER SEAL	1	
9	0228900960	RUBBER SEAL	1	
10	Y0228800820	RUBBER SEAL	2	
11	0228800470	RUBBER SEAL	1	
12	Y0229400510	RUBBER SEAL	1	
13	0229200880	RUBBER SEAL	1	
14	0228100340	RUBBER SEAL	2	
15	70NS2016	RUBBER SEAL	2	REPLACES P/N 0228100350
16	Y0229200145	RUBBER SEAL	2	
17	Y0229200100	RUBBER SEAL	2	

BATTERY CHARGER ASSY. (OPTION)

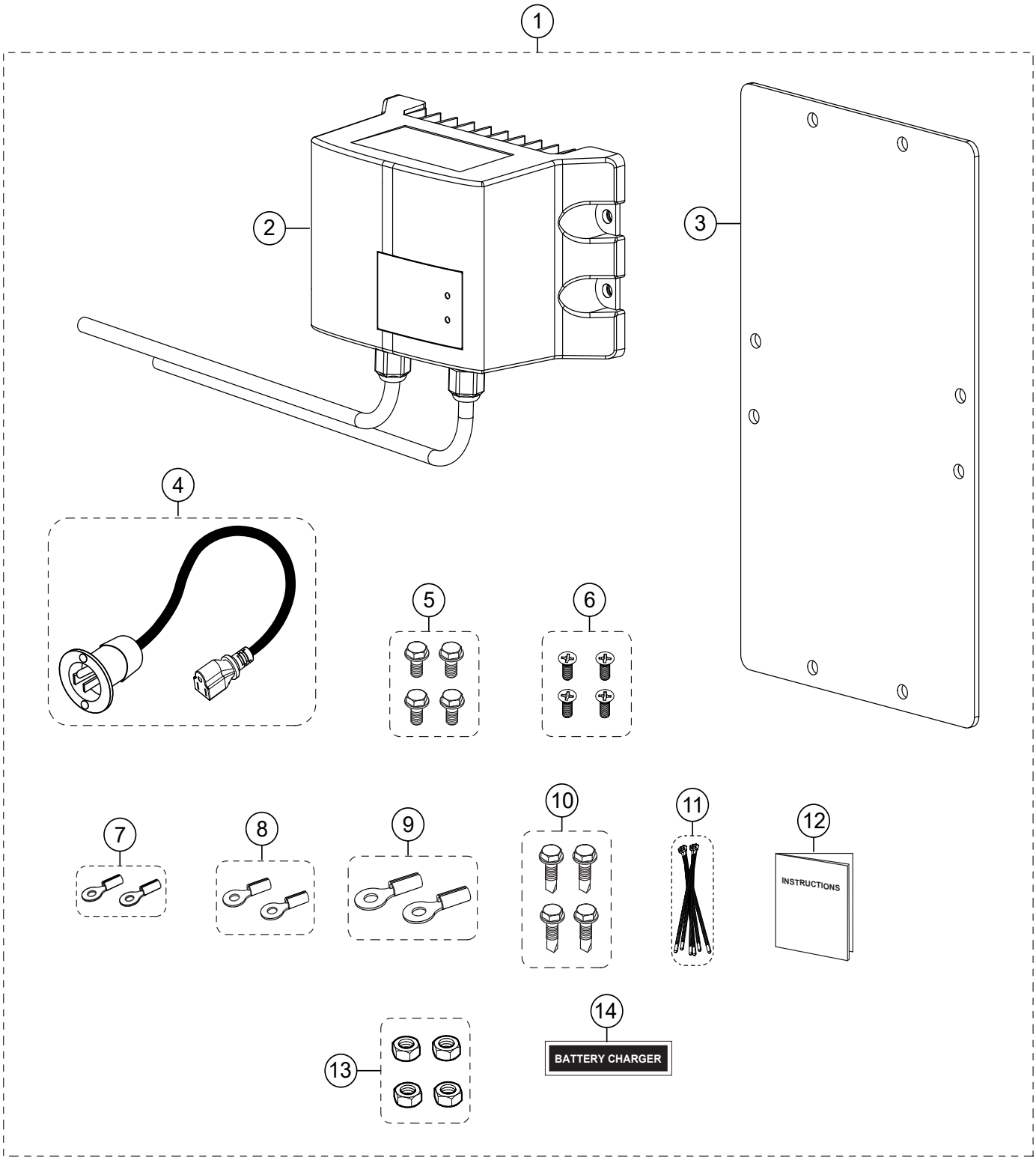

BATTERY CHARGER ASSY. (OPTION)

NO.	PART NO.	PART NAME	QTY.	REMARKS
1	MQPBCKIT-J	BATTERY CHARGER ASSY.	1	INCLUDES ITEMS W/#
2#	EE62075	BATTERY CHARGER, 6A 12V	1	
3#	EE62021	ADAPTER, BATTERY CHARGER, LE	1	
4#	EE62076	INLET REC. AND CORD, NEMA 5-15P	1	
5#		HEX HD. SCREW W/ WASHER, M4X12MM	1	OBTAIN LOCALLY
6#		FLAT HEAD SCREW, 10-32X1/2"	4	OBTAIN LOCALLY
7#		RING TERMINAL, 5/16", 14-16AWG	2	OBTAIN LOCALLY
8#		RING TERMINAL, 3/8", 14-16AWG	2	OBTAIN LOCALLY
9#		RING TERMINAL, 1/2", 14-16AWG	2	OBTAIN LOCALLY
10#		SELF TAPPING HEX SCREW, #8	4	OBTAIN LOCALLY
11#		ZIP TIES, #6	20	OBTAIN LOCALLY
12#	EE60983	3A BATTERY CHARGER KIT, INST.	1	
13#		HEX NUT, 10-32	4	OBTAIN LOCALLY
14#	M1940011014Q	DECAL, BATTERY CHARGER	1	

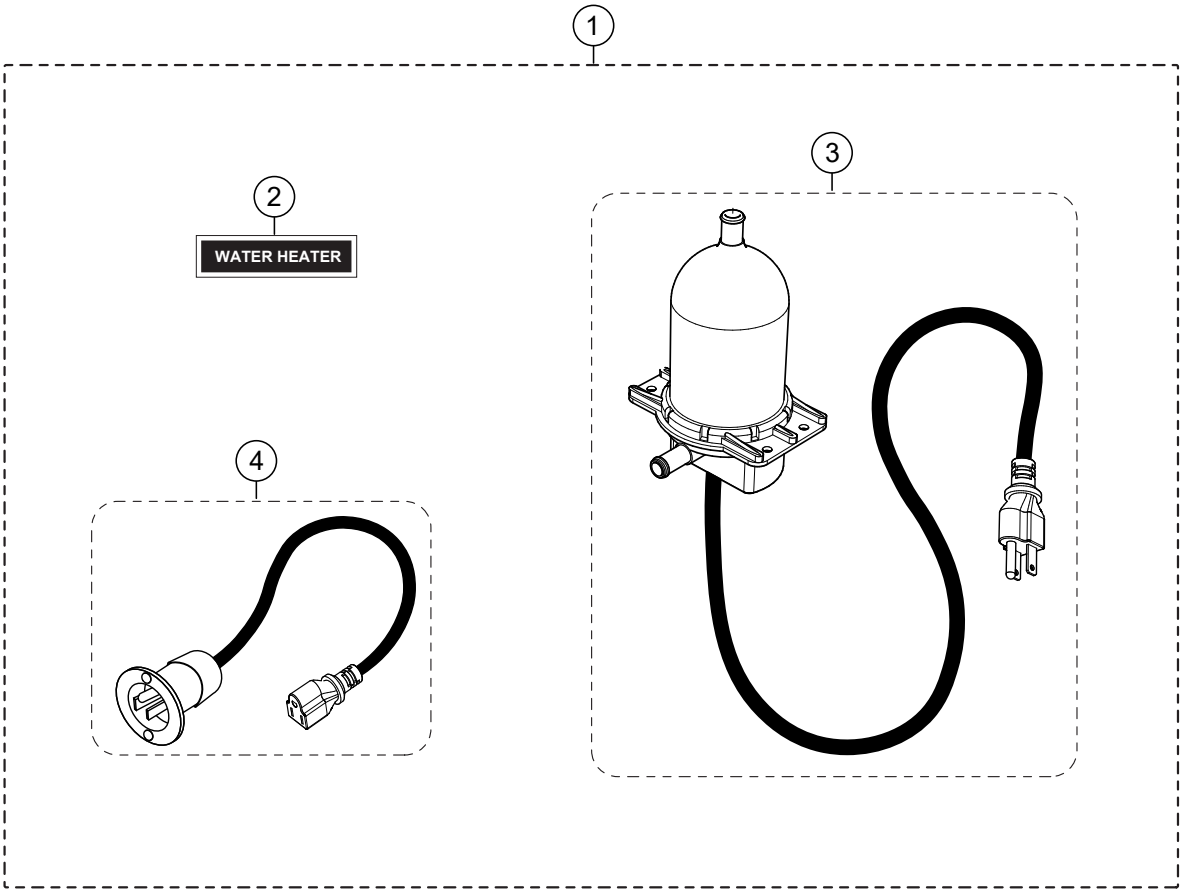
1
2
WATER HEATER
3
4

ENGINE BLOCK HEATER ASSY. (OPTION)

NO.	PART NO.	PART NAME	QTY.	REMARKS
1	MQPHEATTKIT-C	BLOCK HEATER, 1000W	1	INCLUDES ITEMS W/#
2#	M194001005Q	DECAL, WATER HEATER	1	
3#	EE10814	HEATER, TANK, 120V 1000W	1	
4#	EE62076	INLET REC. AND CORD, NEMA 5-15P, 15A	1	

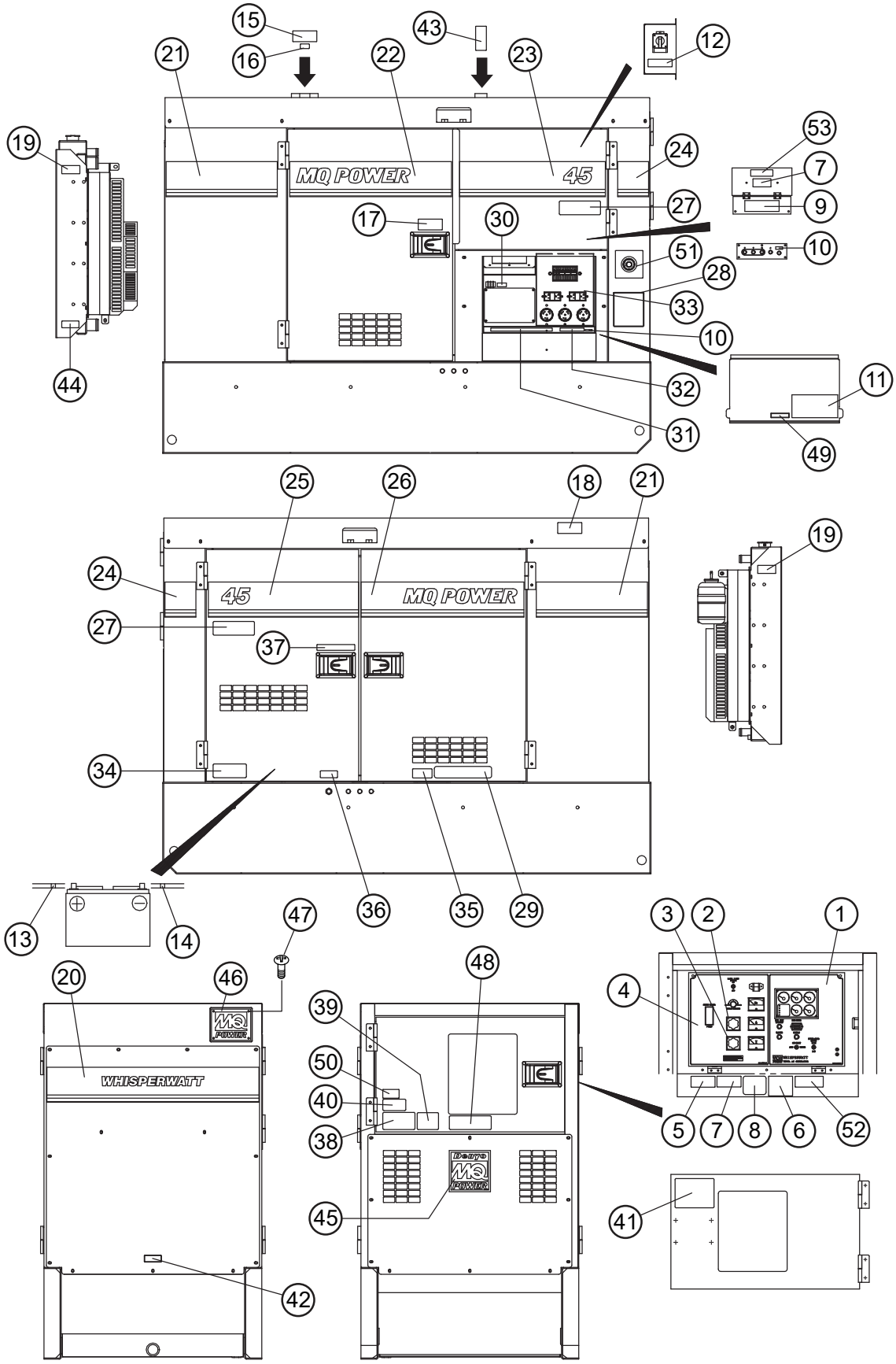
MQ POWER
45
WHISPERWATT

NO.	PART NO.	PART NAME	QTY.	REMARKS
1	M1551000303	DECAL: ENGINE OPERATING	1	M15100030
2	M9520000104	DECAL: AMMETER CHANGE-OVER SW.	1	M92000010
3	M9520000204	DECAL: VOLTMETER CHANGE-OVER SW.	1	M92000020
4	M1551000203	DECAL: GENERATOR CONTROL	1	M15100020
5	M9520100704	DECAL: WARNING ARC FLASH	1	M92010070
6	M9520100304	DECAL: GENERAL CAUTIONS	1	M92010030
7	M9520100004	DECAL: WARNING ELECTRICAL SHOCK	2	M92010000
8	M9520200404	DECAL: O.C.R. RESET	1	M92020040
9	M9520200003	DECAL: CONNECTION OF OUTPUT CABLE	1	M92020000
10	M9520000004	DECAL: GROUNDING	2	M92000000
11	M9520100404	DECAL: DANGER HIGH VOLTAGE	1	M92010040
12	M9520100204	DECAL: CAUTION CHANGE-OVER SW.	1	M92010020A
13	M9500300104	DECAL: +	1	M90030010
14	M9500300004	DECAL: -	1	M90030000
15	M9503100004	DECAL: WARNING RADIATOR CAP	1	M90310000
16	M9500100004	DECAL: WATER	1	M90010000
17	M9510100004	DECAL: CAUTION HIGH TEMP.	1	M91010000
18	M9503200004	DECAL: WARNING EXHAUST GAS	1	M90320000
19	M9503000004	DECAL: WARNING ROTATING PART	2	M90300000
20	M1561101103	STRIPE	1	
21	M1561101203	STRIPE	2	
22	M1561101303	STRIPE	1	
23	M1561101403	STRIPE	1	
24	M1561101504	STRIPE	2	
25	M1561101603	STRIPE	1	
26	M1561101703	STRIPE	1	
27	M9520100603	DECAL: WARNING AUTO START	2	M92010060
28	M1551000504	DECAL: NOTICE LOAD SHARING	1	M15100050
29	M9503000103	DECAL: DAILY CHECK WATER AND OIL	1	M90300010
30	M9520000504	DECAL: START CONTACT	1	M92000050
31	M9520100503	DECAL: WARNING	1	M92010050
32	M9511100104	DECAL: NOTICE RECEPTACLE	1	M91110010
33	M1550002203	DECAL: AUXILIARY OUTPUTS	1	M15000220 S/N 7250445 AND BELOW
33	M1550000703	DECAL: AUXILIARY OUTPUTS	1	M15000070 S/N 7250446 AND ABOVE
34	M9510100403	DECAL: WARNING BATTERY CONNECT	1	M91010040
35	M9501500004	DECAL: DIESEL FUEL	1	M90150000
36	M9500000004	DECAL: OIL DRAIN	1	M90000000
37	M9510000104	DECAL: DOCUMENT BOX LOCATED	1	M91000010
38	M9511100004	DECAL: ENVIRONMENTAL WARNING	1	M91110000
39	M9503200104	DECAL: DANGER EX. GAS (INDOOR)	1	M90320010
40	920214100	DECAL: WARNING START FIRES	1	REPLACES P/N M9504200004 M90420000
41	M2550002303	OPERATING PRECAUTIONS	1	M25000230 S/N 7254612 AND BELOW
41	M1551001503	OPERATING PROCEDURES	1	S/N 7254613 AND ABOVE
42	M9510000004	DECAL: FLUID DRAIN	1	M91000000
43	M1550001504	CAUTION: LIFTING CAPACITY	1	M15000150
44	M9500100304	INTER-COOLER DRAIN	1	M90010030
45	M9511200204	STICKER, MQ	1	M91120020

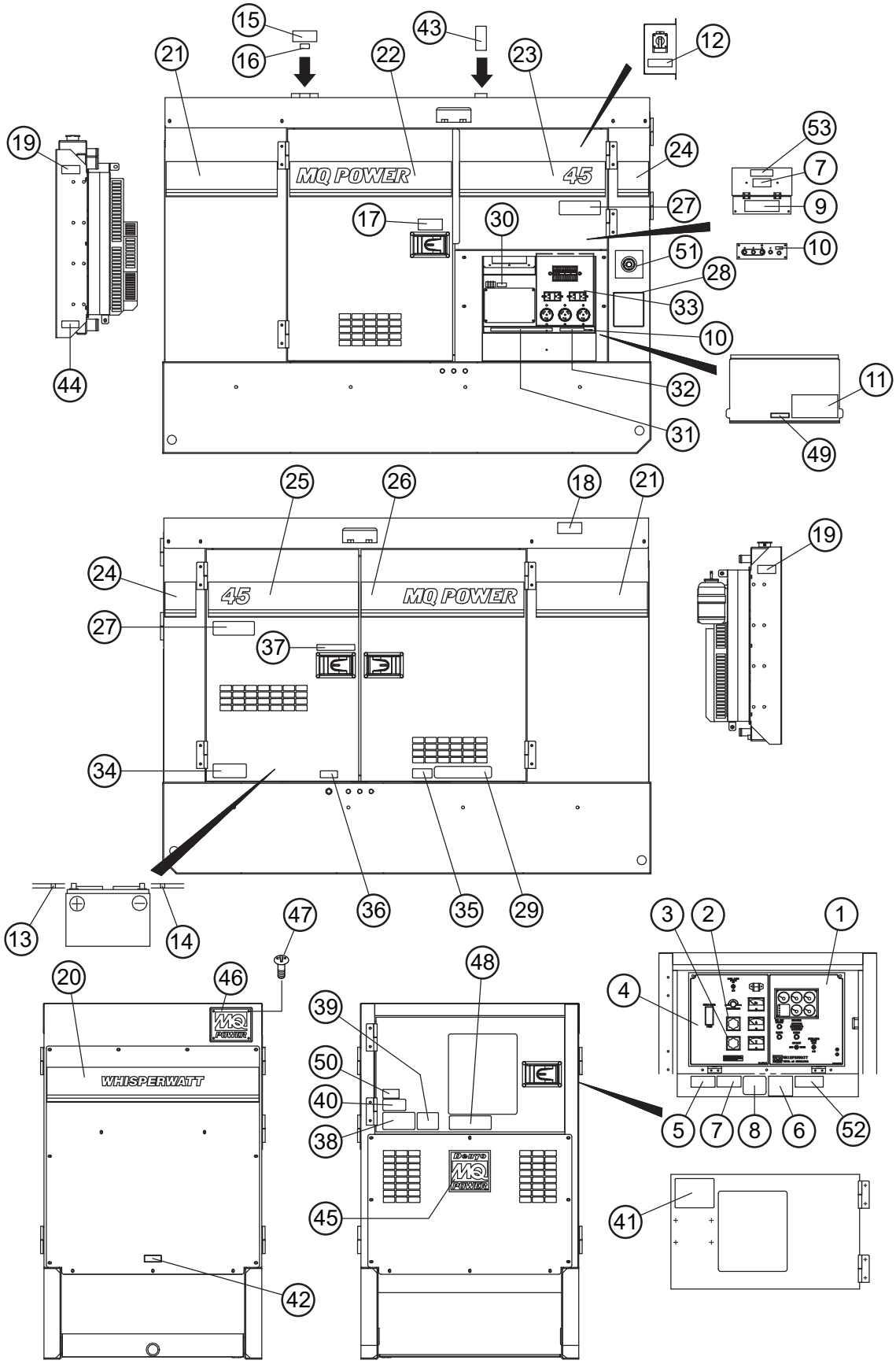
MQ POWER
45
WHISPERWATT

NO.	PART NO.	PART NAME	QTY.	REMARKS
46	0600500092	EMBLEM		1
47	0021106015	MACHINE SCREW		4
48	M9511200103	TIER 4F	1	M91120010
49	M9521200604	BONDED NEUTRAL	1	M92120060 S/N 7251216 AND ABOVE
50	38707	DECAL: WARNING PROPOSITION 65	1	REPLACES M9504200104 S/N 7252421 AND ABOVE
51	M9521002804	DECAL: E-STOP BUTTON	1	S/N 7254613 AND ABOVE
52	M1551001704	DECAL: NOTICE RELEASE E-STOP	1	S/N 7255123 AND ABOVE
53	M1551002104	DECAL: OUTPUT TERMINAL BOLT TORQUE	1	S/N 7257033 AND ABOVE

PARTS MANUAL

HERE'S HOW TO GET HELP

PLEASE HAVE THE MODEL AND SERIAL NUMBER ON HAND WHEN CALLING

UNITED STATES

Multiquip Inc.

(310) 537- 3700
6141 Katella Avenue Suite 200
Cypress, CA 90630
E-MAIL: mq@multiquip.com
WEBSITE: www.multiquip.com

CANADA

Multiquip

(450) 625-2244
4110 Industriel Boul.
Laval, Quebec, Canada H7L 6V3
E-MAIL: infocanada@multiquip.com

UNITED KINGDOM

Multiquip (UK) Limited Head Office

0161 339 2223
Unit 2, Northpoint Industrial Estate, Globe Lane,
Dukinfield, Cheshire SK16 4UJ
E-MAIL: sales@multiquip.co.uk

© COPYRIGHT 2026, MULTIQUIP INC.

Multiquip Inc., the MQ logo and the MQ Power logo are registered trademarks of Multiquip Inc. and may not be used, reproduced, or altered without written permission. All other trademarks are the property of their respective owners and used with permission.

This manual MUST accompany the equipment at all times. This manual is considered a permanent part of the equipment and should remain with the unit if resold.

DISCLAIMER: Product features, descriptions, and specifications are based on published information at the time of publication and are subject to change at any time without notice. Multiquip Inc. and its affiliates reserve the right to change specifications, features, design, and descriptions of products at any time without notice.

Manufactured for
MQ Power Inc.
by
DENYO MANUFACTURING CORP.