PARTS MANUAL

MULTIQUIP®

MODEL QP3TS
TRASH PUMP
(HONDA GX270RT2QMTR280 GASOLINE ENGINE)

Revision #0 (04/13/20)

To find the latest revision of this publication, visit our website at: www.multiquip.com

THIS MANUAL MUST ACCOMPANY THE EQUIPMENT AT ALL TIMES.

QP3TS Trash Pump

Table Of Contents 2
Explanation Of Code In Remarks Column..... 4
Suggested Spare Parts 5

Component Drawings

Pump Assembly..... 6-9
Enclosure Assembly 10-13
Heat Exchanger Assembly 14-15
Fuel Tank Assembly..... 16-17
Charcoal Canister Assembly 18-19
Engine Mount And Battery Assembly..... 20-21

NOTICE

Part numbers are subject to change without notice.

NOTES

EXPLANATION OF CODE IN REMARKS COLUMN

The following section explains the different symbols and remarks used in the Parts section of this manual. Use the help numbers found on the back page of the manual if there are any questions.

> ***NOTICE***
>
> The contents and part numbers listed in the parts section are subject to change **without notice**. Multiquip does not guarantee the availability of the parts listed.

SAMPLE PARTS LIST

NO.	PART NO.	PART NAME	QTY.	REMARKS
1	12345	BOLT	1	INCLUDES ITEMS W/%
2%		WASHER, 1/4 IN.		NOT SOLD SEPARATELY
2%	12347	WASHER, 3/8 IN.	1	MQ-45T ONLY
3	12348	HOSE	A/R	MAKE LOCALLY
4	12349	BEARING	1	S/N 2345B AND ABOVE

NO. Column

Unique Symbols — All items with same unique symbol (@, #, +, %, or >) in the number column belong to the same assembly or kit, which is indicated by a note in the "Remarks" column.

Duplicate Item Numbers — Duplicate numbers indicate multiple part numbers, which are in effect for the same general item, such as different size saw blade guards in use or a part that has been updated on newer versions of the same machine.

> ***NOTICE***
>
> When ordering a part that has more than one item number listed, check the remarks column for help in determining the proper part to order.

PART NO. Column

Numbers Used — Part numbers can be indicated by a number, a blank entry, or TBD.

TBD (To Be Determined) is generally used to show a part that has not been assigned a formal part number at the time of publication.

A blank entry generally indicates that the item is not sold separately or is not sold by Multiquip. Other entries will be clarified in the "Remarks" Column.

QTY. Column

Numbers Used — Item quantity can be indicated by a number, a blank entry, or A/R.

A/R (As Required) is generally used for hoses or other parts that are sold in bulk and cut to length.

A blank entry generally indicates that the item is not sold separately. Other entries will be clarified in the "Remarks" Column.

REMARKS Column

Some of the most common notes found in the "Remarks" Column are listed below. Other additional notes needed to describe the item can also be shown.

Assembly/Kit — All items on the parts list with the same unique symbol will be included when this item is purchased.

Indicated by:

"INCLUDES ITEMS W/(unique symbol)"

Serial Number Break — Used to list an effective serial number range where a particular part is used.

Indicated by:

"S/N XXXXX AND BELOW"
"S/N XXXX AND ABOVE"
"S/N XXXX TO S/N XXX"

Specific Model Number Use — Indicates that the part is used only with the specific model number or model number variant listed. It can also be used to show a part is NOT used on a specific model or model number variant.

Indicated by:

"XXXXX ONLY"
"NOT USED ON XXXX"

"Make/Obtain Locally" — Indicates that the part can be purchased at any hardware shop or made out of available items. Examples include battery cables, shims, and certain washers and nuts.

"Not Sold Separately" — Indicates that an item cannot be purchased as a separate item and is either part of an assembly/kit that can be purchased, or is not available for sale through Multiquip.

QP3TS TRASH PUMP WITH HONDA GX270RT2QMTR280 GASOLINE ENGINE

1 to 5 units

Qty.	P/N	Description
1	1992040033	IMPELLER
1	0811885446	MECH. SEAL SLEEVE
2	0803442930	MECHANICAL SEAL
2	0483602250	O-RING, DRAIN COVER
2	0489403400	O-RING, CASING
2	17210Z0V781	O-RING, IMPELL., MECH. SEAL
2	0631211159	FLOODING CAP W/O-RING
1	8910240950	FUEL CAP
1	8910310980	FUEL FILTER, FUEL TANK
4	0852834525	ADJUST LINER
4	0852854525	ADJUST LINER

GX270RT2QMTR280 GASOLINE ENGINE

1 to 5 units

Qty.	P/N	Description
2	17211899000	ELEMENT, AIR CLEANER
2	9807956876	SPARK PLUG

NOTICE

Part numbers on this Suggested Spare Parts list may supersede/replace the part numbers shown in the following parts lists.

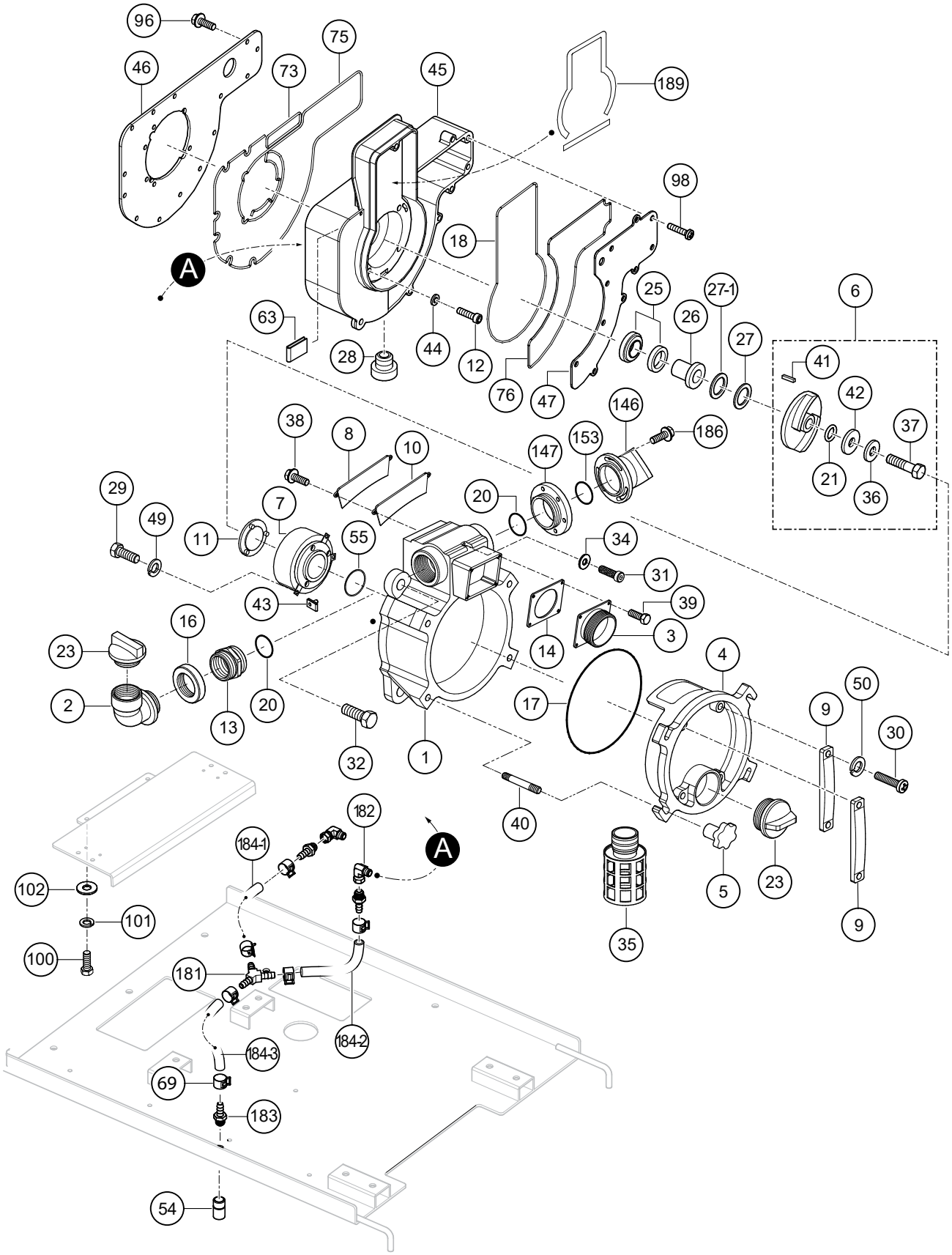
96
46
75
73
45
189
98
18
A
25
27-1
6
26
27
63
28
44
12
76
47
41
42
146
37
38
8
10
153
186
147
21
36
29
20
7
49
11
55
34
31
43
39
16
14
3
23
4
50
2
20
13
17
9
30
32
1
40
182
184-1
A
102
101
5
23
100
35
9
181
184-2
184-3
69
183
54

NO.	PART NO.	PART NAME	QTY.	REMARKS
1	1992100011	CASING	1	
2	89100015500014	ELBOW, FLOODING	1	
3	13910001600014	COVER, SUCTION	1	
4	1992100173	COVER, DRAIN	1	
5	19920002200014	HANDLE, DRAIN COVER	4	
6	1992040033ASSY	IMPELLER	1	INCLUDES ITEMS W/$ REPLACES P/N 1992040033
7	1992000110	VOLUTE CASING	1	
8	1992100742	PLATE, SUCTION	1	
9	12471002500002	HANDLE, DRAIN COVER SET	2	REPLACES P/N 1247100250
10	1992330410	PACKING, SUCTION PLATE	1	
11	1992250700	PLATE, WEAR	1	
12	0131290689	CAP SCREW, CASING COVER SET BOLT	4	
13	07904330300014	NIPPLE	1	
14	1378350350	VALVE, CHECK	1	
16	8910131560	COUPLING, FLOODING ELBOW	1	
17	0483602250	O-RING, DRAIN COVER	1	
18	0489403400	O-RING, CASING	1	
20	0481310800	O-RING, NIPPLE	2	
21$	0482200240	O-RING, IMPELLER, MECHANICAL SEAL	2	
23	0631211159	CAP FLOODING W/O-RING	2	
25	0803442930	SEAL, MECHANICAL	1	
26	0811885446	SLEEVE, MECHANICAL SEAL	1	
27	0852834525	LINER, ADJUSTING	1	
27-1	0852854525	LINER, ADJUSTING	1	
28	0631214057	PLUG	1	
29	0131190823	CAP SCREW, VOLUTE CASING	4	
30	0141090825	SCREW 8X25	4	
31	0131191290	CAP SCREW, CASING	1	
32	0131191235	CAP SCREW, CASING	4	
34	0459220120	WASHER, SEAL, CASING	1	
35	0742214080	STRAINER, STEEL	1	
36$	0458220100	WASHER, SEAL, IMPELLER	1	
37$	0191190750	BOLT, IMPELLER	1	
38	0181090820	BOLT SET W/LOCK WASHER	2	
39	0181090825	BOLT SET W/LOCK WASHER	4	
40	0151191257	STUD BOLT, DRAIN COVER HANDLE	4	
41$	0520040431	KEY, IMPELLER	1	
42$	1466251240	WASHER, IMPELLER	1	REPLACES P/N 43342012400011
43	0204490060	U-NUT, WEAR PLATE	3	
44	0458220071	WASHER, SEAL CASING COVER	4	
45	8910100520	CASING COVER	1	
46	8910101440	PLATE, CASING COVER, ENGINE SIDE	1	
47	8910101450	PLATE, CASING COVER, CASING SIDE	1	
49	0451290080	WASHER, LOCK, 8 MM, VOLUTE CASING	4	
50	0451290080	WASHER, LOCK, DRAIN COVER SET HANDLE	4	

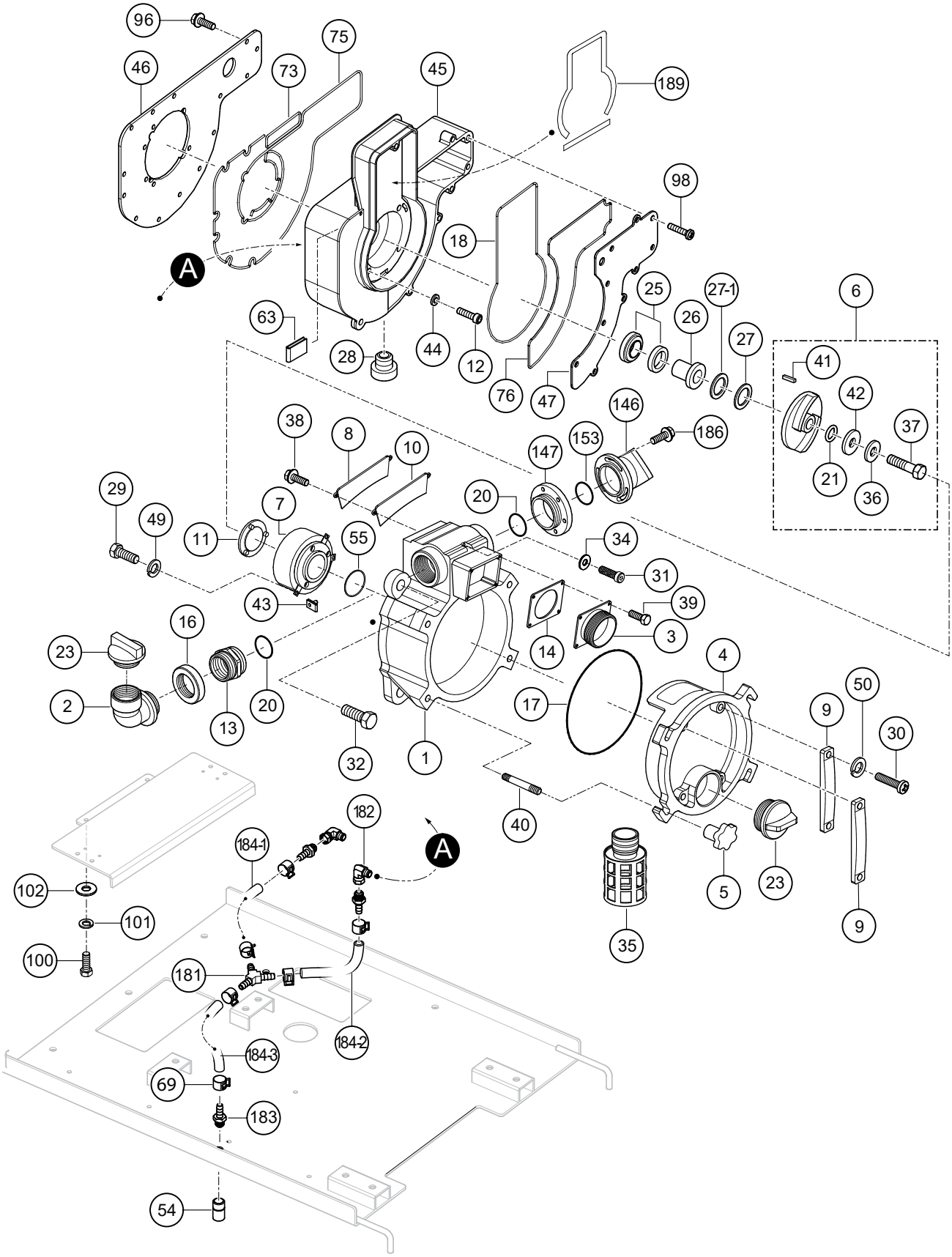
96
46
75
73
45
189
98
18
A
25
27-1
6
26
27
63
28
44
12
76
47
41
42
146
37
38
8
10
153
186
147
21
36
29
20
7
49
11
55
34
31
43
39
16
3
14
23
4
50
2
20
13
17
9
30
32
1
40
182
184-1
A
102
101
5
23
100
35
9
181
184-2
184-3
69
183
54

NO.	PART NO.	PART NAME	QTY.	REMARKS
54	8910503760	SILENCER	1	
55	0480570850	O-RING, VOLUTE CASING	1	
63	0472512020	CLIP	3	
69	0937200008	CLIP, HOSE	9	
73	8910670460	SILICON, O-RING 1	1	
75	8910670480	SILICON, O-RING 3	1	
76	8910670490	SILICON, O-RING 4	1	
96	0105060616	HEX HD SCREW W/CAPTIVE WASHER	31	
98	0161050510	PHILLIPS FLAT HEAD SCREW	10	
100	012210020	BOLT	2	REPLACES P/N 0105051020
101	0451250100	WASHER, LOCK M10	12	
102	0401750100	WASHER, FLAT	2	
146	89100000900014	DELIVERY ELBOW	1	
147	89100003300014	DELIVERY ADAPTER	1	
153	0481310850	O-RING	1	
181	A423060606	HOSE CONNECTOR, TYPE Y	1	
182	F600520018	ELBOW	2	
183	G510180060	HOSE, NIPPLE	3	
184-1	092850-6001	HOSE, 1 FT. (80 MM)	1	CUT TO REQUIRED LENGTH
184-2	092850-6001	HOSE, 1 FT. (150 MM)	1	CUT TO REQUIRED LENGTH
184-3	092850-6001	HOSE, 1 FT. (300 MM)	1	CUT TO REQUIRED LENGTH
186	0105060825	HEX HD. SCREW W/CAPTIVE WASHER	3	
189	0490461100	URETHANE SHEET	4	

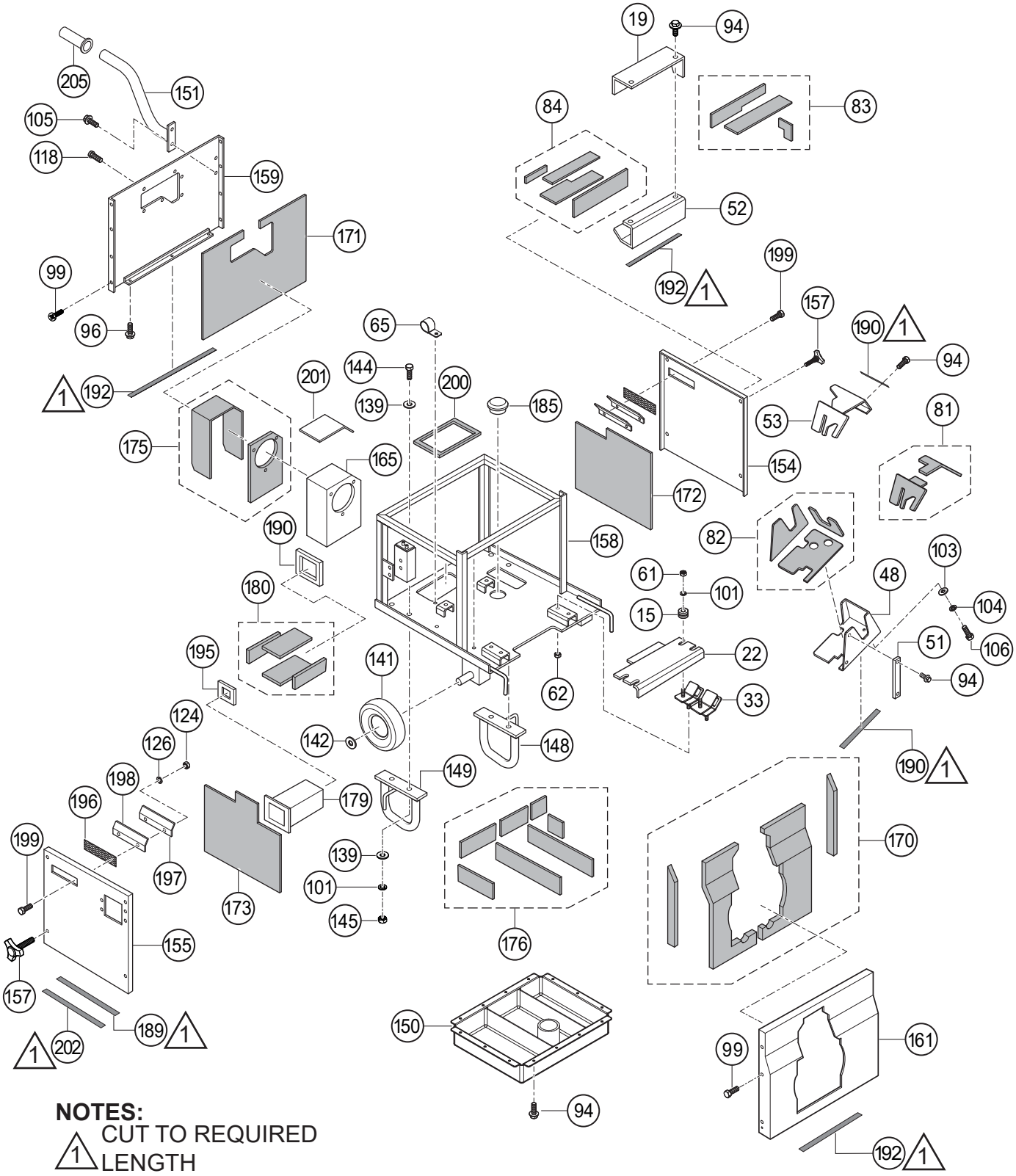

NOTES:

1 CUT TO REQUIRED LENGTH

NO.	PART NO.	PART NAME	QTY.	REMARKS
15	73082246500014	CUSHION RUBBER SPACER	4	
19	8910205130C014	DUCT H	1	
22	8910214550C014	CUSHION RUBBER PLATE	1	
33	0725223229	RUBBER, CUSHION	4	
48	8910215110C014	DUCT G	1	
51	8910215120C014	ACCESSORY, DUCT G	1	
52	8910215140C014	DUCT I	1	
53	8910215180C014	DUCT F	1	
61	0205490101	NUT	4	
62	0209150080	NUT, FLANGE	4	
65	0933200012	CLAMP, HOSE SUPPORT	2	
81	8910718350	GLASS WOOL, DUCT F	1	
82	8910718360	GLASS WOOL, DUCT G	1	
83	8910718370	GLASS WOOL, DUCT H	1	
84	8910718380	GLASS WOOL, DUCT I	1	
96	0105060616	HEX HD SCREW W/CAPTIVE WASHER	31	
99	0141150616	SCREW	24	
101	0451250100	WASHER, LOCK M10	12	
103	0401450080	WASHER, FLAT M8	5	
104	0451290080	WASHER, LOCK 8 MM	1	REPLACES P/N 0451250080
105	0105060820	HEX HD SCREW W/CAPTIVE WASHER	4	
106	0105050816	BOLT	1	
118	0143090510	TRUSS HEAD SCREW	6	
124	0205490050	NUT	5	
126	1505004	LOCK, WASHER	9	REPLACES P/N 0451250050
139	0401750100	WASHER, PLATE	11	
141	0982601906	TIRE, URETHANE FOAM	2	
142	0401450200	WASHER PLATE, 20 MM	2	
144	012010030	BOLT	4	REPLACES P/N 0105051030
145	020310080	NUT	4	REPLACES P/N 0205450100
148	8910213620C014	PUMP STAND, RIGHT	1	
149	8910213640C014	PUMP STAND, LEFT	1	
150	8910215150C014	DUCT, SUCTION-EXHAUST	1	
151	8910219050C014	HANDLE	2	
154	8910217550P002	COVER, RIGHT	1	
155	8910217560P002	COVER, LEFT	1	
157	8910312910	KNOB BOLT	8	
158	89102175000014	FRAME	1	
159	8910217540P002	COVER, REAR	1	
161	8910217530P002	COVER, FRONT	1	
165	8910205160C014	DUCT, E	1	

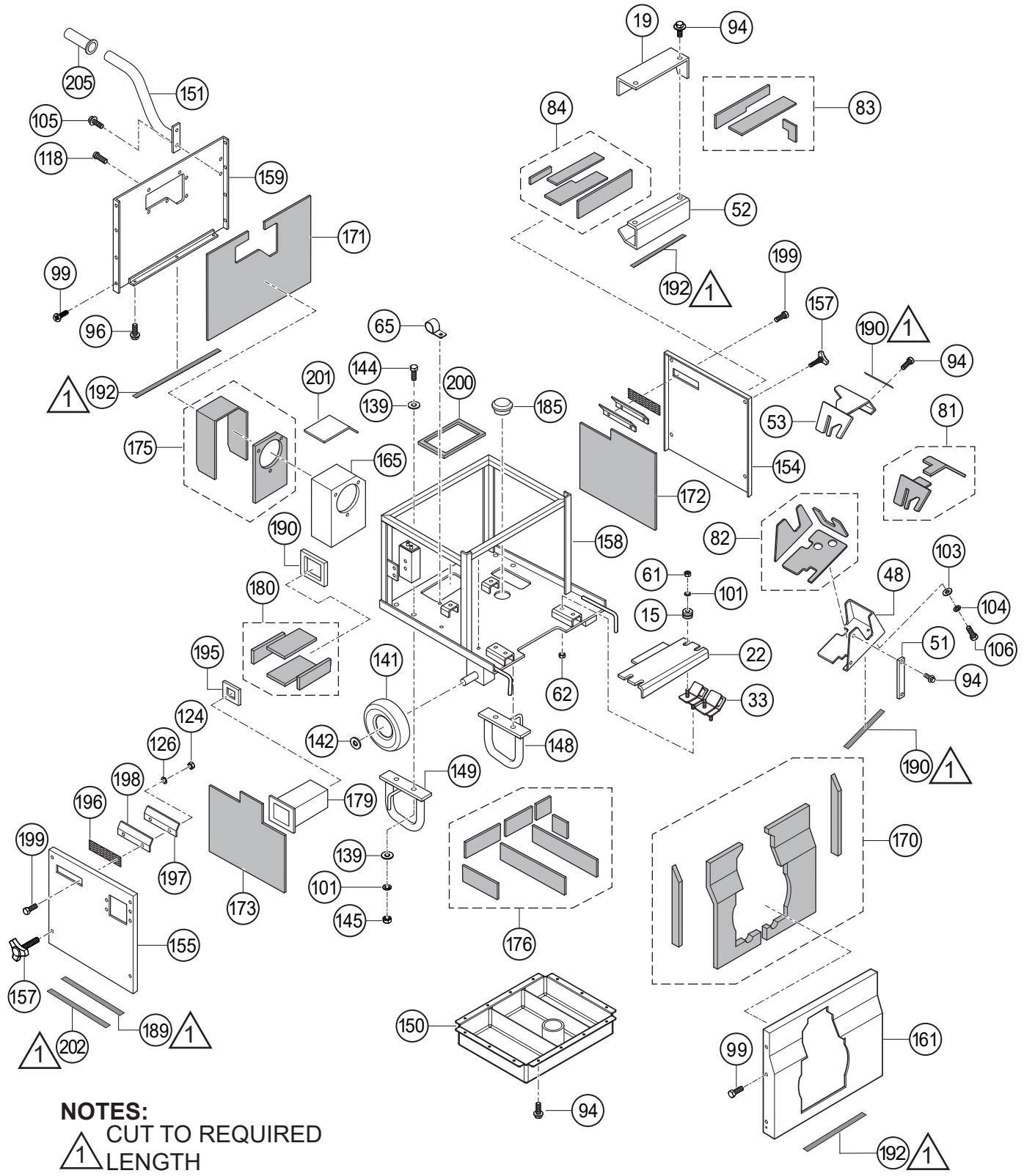

NOTES:

1 CUT TO REQUIRED LENGTH

NO.	PART NO.	PART NAME	QTY.	REMARKS
170	8910718860	GLASS WOOL, COVER FRONT	1	
171	8910718850	GLASS WOOL, COVER REAR	1	
172	8910718830	GLASS WOOL, COVER RIGHT	1	
173	8910718840	GLASS WOOL, COVER LEFT	1	
175	8910718390	GLASS WOOL, DUCT E	1	
176	8910718810	GLASS WOOL, DUCT SUCTION-EXHAUST	1	
179	8910215170C014	DUCT, J	1	
180	8910718820	GLASS WOOL, DUCT J	1	
185	8910343000	GROMMET RUBBER	1	
189	0490461100	URETHANE SHEET LG. 4.3 FT (1,301 MM)	1	CUT TO REQ. LG.
190	0491230670	URETHANE SHEET LG 1.2 FT (350 MM)	1	CUT TO REQ. LG.
192	8910343780	SEALING SHEET LG 4.9 FT (1,495 MM)	1	CUT TO REQ. LG.
195	8910214860C014	REDUCER PLATE	1	
196	89102145900002	SCREEN GRID	2	
197	8910718930	GLASS WOOL, LOUVER	2	
198	89102145800002	LOUVER	2	
199	0141050515	SCREW	4	
200	8910718940	GLASS WOOL, DUCT E, BOTTOM	1	
201	8910718950	GLASS WOOL, DUCT E, TOP	1	
202	0490440800	URETHANE SHEET LG 1.3 FT (382 MM)	1	CUT TO REQ. LG.
205	0732502712	GRIP, HANDLE	2	

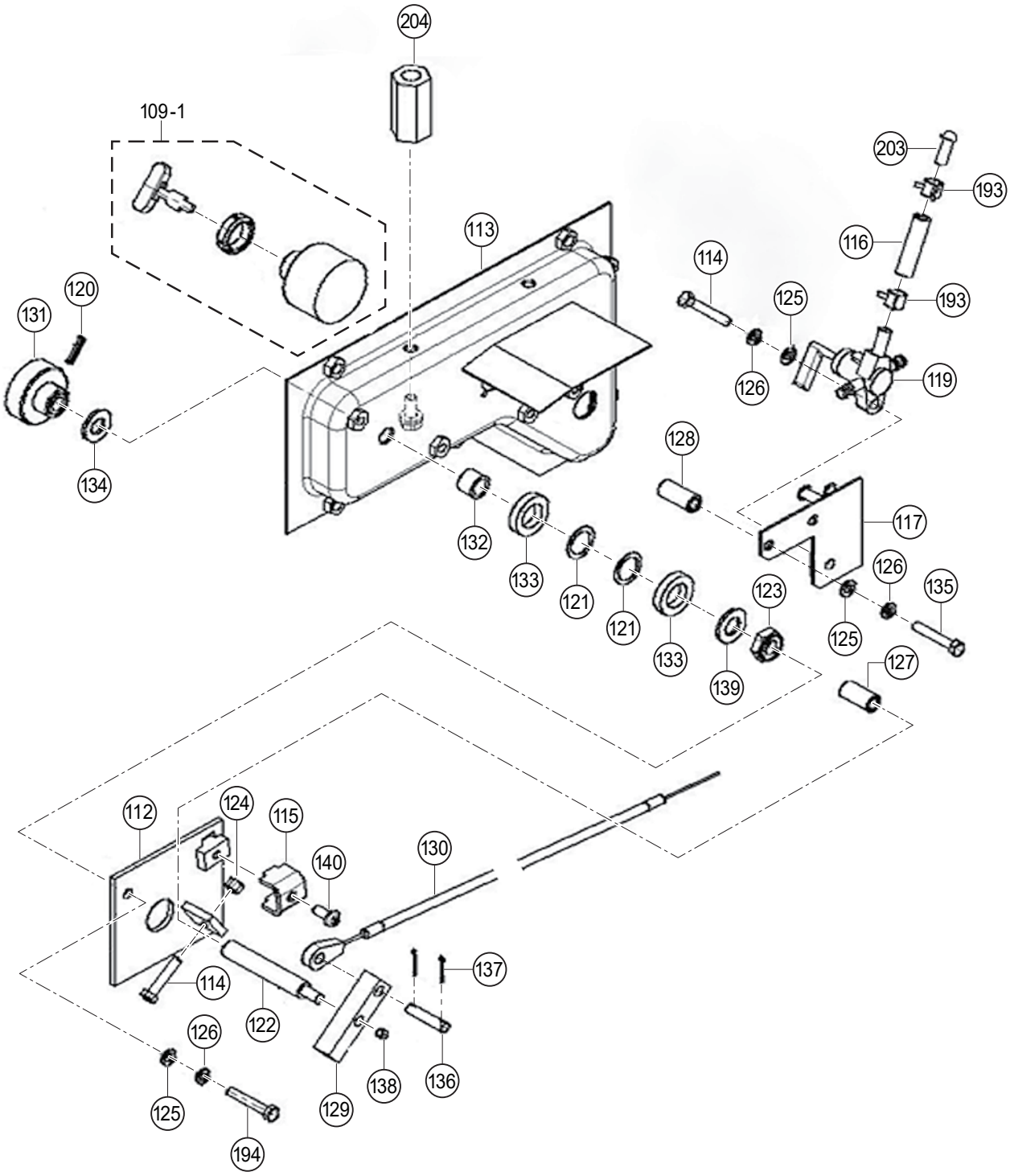
204
109-1
203
193
113
116
114
125
193
120
131
126
119
128
134
117
132
133
121
126
135
121
123
125
133
127
139
112
124
115
130
140
137
114
122
126
138
136
125
129
194

HEAT EXCHANGER ASSY.

NO.	PART NO.	PART NAME	QTY.	REMARKS
109-1	8910801100	IGNITION SWITCH W/KEY	1	
112	8910217060C014	BRACKET, THROTTLE	1	
113	8910212600C014	CONTROL PANEL	1	
114	0105050525	BOLT	2	
115	8910207070C014	WIRE CLAMP, THROTTLE	1	
116	8910343790	FUEL HOSE, COCK-PLUG	1	
117	8910214250C014	BRACKET, FUEL COCK	1	
119	16950ZVD003	FUEL COCK	1	
120	0642500416	SPRING PIN	1	
121	0455230140	WAVE WASHER	2	
122	0125051070	BOLT	1	
123	0204450100	U NUT	1	
124	0205490050	NUT	5	
125	58151	WASHER, FLAT 5MM	5	REPLACES P/N 0401450050
126	1505004	WASHER, LOCK	9	REPLACES P/N 0451250050
127	8910203600	SPACER	2	
128	8910203610	SPACER	2	
129	8910204370C014	LINK, THROTTLE	1	
130	8910237080	THROTTLE WIRE	1	
131	8910312930	KNOB, THROTTLE	1	
132	8910491330	SPACER	1	
133	8910491340	NYLON WASHER	2	
134	8910491341	NYLON WASHER	1	
135	0105050535	BOLT	2	
136	8910209630	PIN	1	
137	641500212	SPLIT PIN	2	
138	0171150505	SET SCREW	1	
139	0401750100	PLATE WASHER	11	
140	0141050512	SCREW	1	
193	0937200009	HOSE CLIP	3	
194	0105050530	BOLT	2	
203	0649100616	PLUG	1	
204	8910183630	SPACER	2	

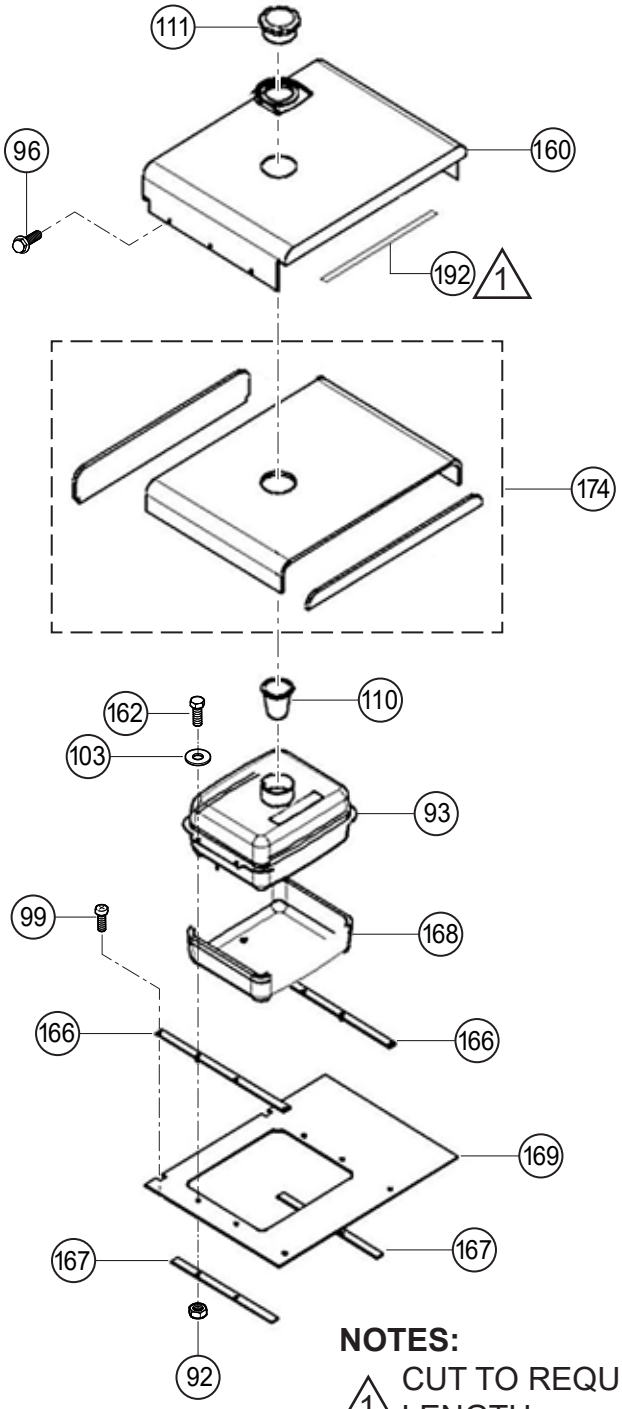

NOTES:

1 CUT TO REQUIRED LENGTH

FUEL TANK ASSY.

NO.	PART NO.	PART NAME	QTY.	REMARKS
92	0209150080	NUT, FLANGE	4	
93	8910800900	FUEL TANK	1	
96	0105060616	HEX HD SCREW W/CAPTIVE WASHER	31	
99	0141150616	SCREW	24	
103	0401450080	WASHER, FLAT M8	5	
110	8910310980	FUEL FILTER	1	
111	8910240950	FUEL CAP	1	
160	8910217520P002	COVER, TOP	1	
162	0105050830	BOLT	4	
166	8910200960C014	BRACKET, FUEL TANK	2	
167	8910200970C014	BRACKET, GLASS WOOL	2	
168	8910718880	GLASS WOOL, BOTTOM FUEL TANK	1	
169	8910718890	GLASS WOOL, FUEL TANK	1	
174	8910718870	GLASS WOOL, COVER TOP	1	
192	8910343780	SEALING SHEET LG 4.9 FT (1,495 MM)	1	CUT TO REQUIRED LENGTH

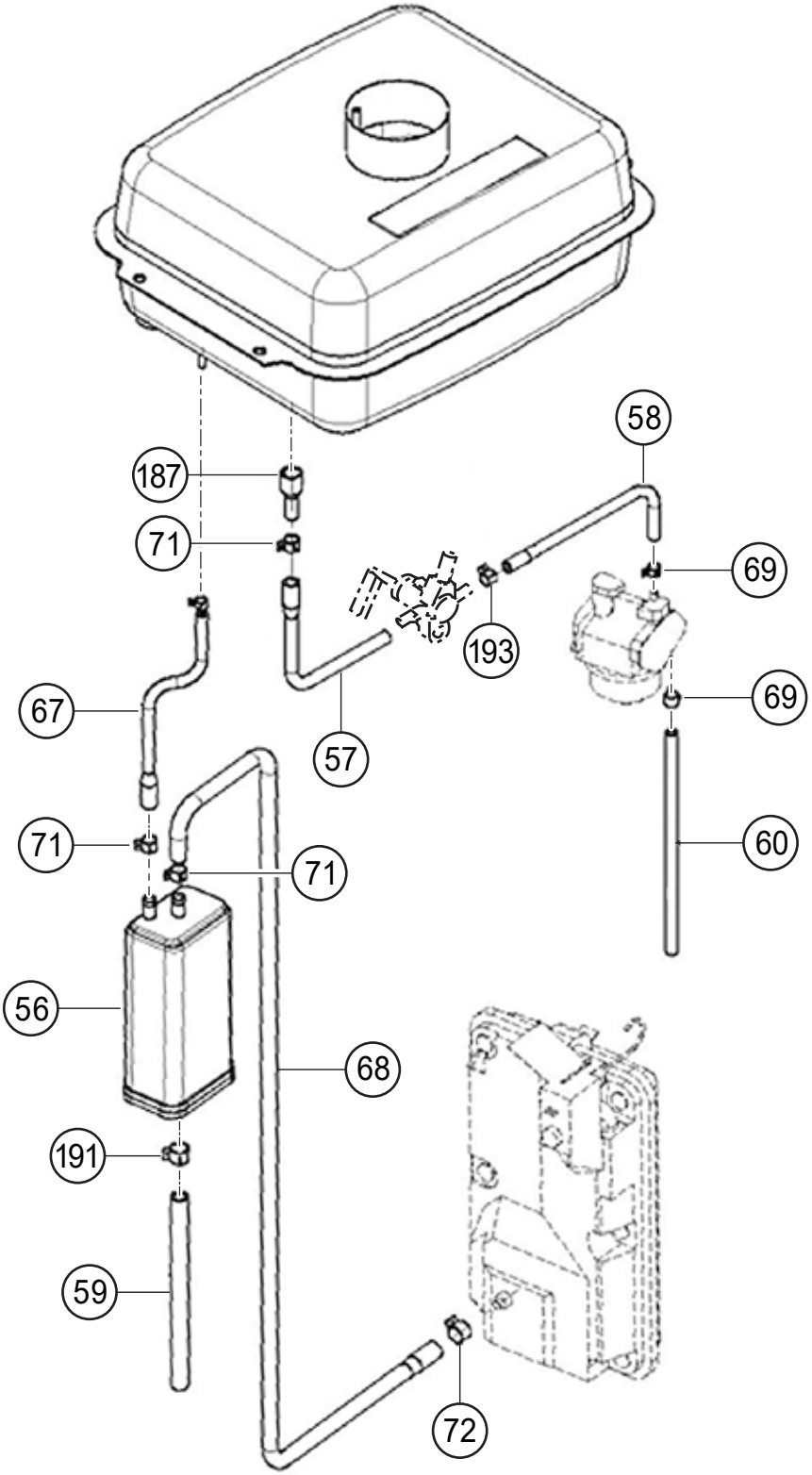
58
187
71
69
193
67
69
57
71
60
71
56
68
191
59
72

CHARCOAL CANISTER ASSY.

NO.	PART NO.	PART NAME	QTY.	REMARKS
56	8910802500	CANISTER	1	
57	8910343700	HOSE, FUEL, FUEL TANK-COCK	1	
58	8910343710	HOSE, FUEL, CARBURETOR-COCK	1	
59	8910343740	HOSE, FUEL, CANISTER-AIR	1	
60	8910343750	HOSE, DRAIN, CARBURETOR	1	
67	8910343720	HOSE, FUEL TANK-CANISTER	1	
68	8910343730	HOSE, AIR CLEANER-CANISTER	1	
69	0937200008	CLIP, HOSE	9	
71	0937200012	CLIP, HOSE	3	
72	0937200014	CLIP, HOSE	1	
116	8910343790	FUEL HOSE, COCK-PLUG	1	
187	KF40012AA	STRAINER, FILTER	1	
191	0937200013	CLIP, HOSE	1	
193	0937200009	CLIP, HOSE	1	

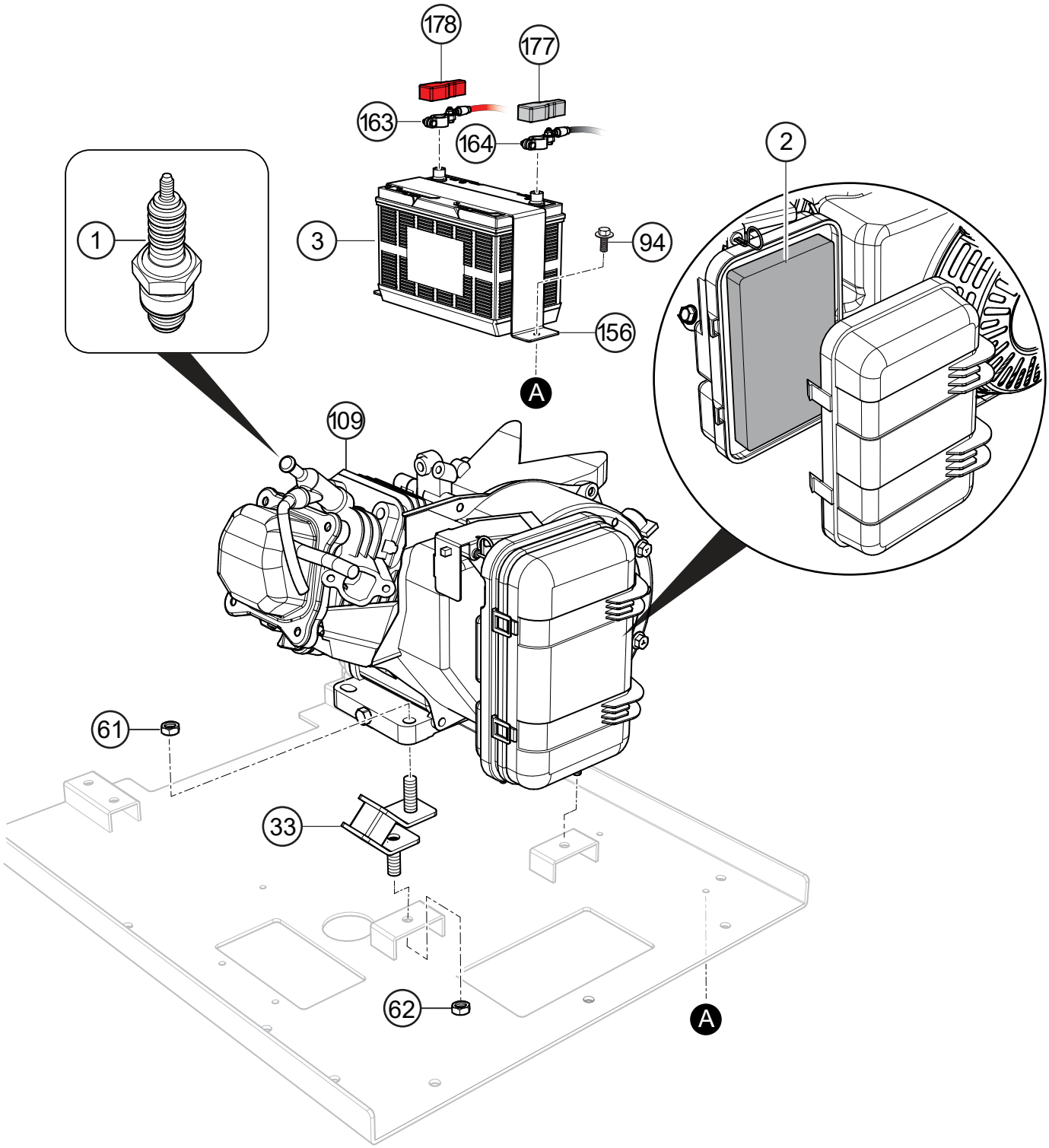
178
177
163
164
2
1
3
94
156
A
109
61
33
62
A

ENGINE MOUNT AND BATTERY ASSY.

NO.	PART NO.	PART NAME	QTY.	REMARKS
1	9807956876	SPARK PLUG	1	
2	17211899000	ELEMENT, AIR CLEANER	1	
3		BATTERY 12V, 11.2 AH (10HR)	1	OBTAIN LOCALLY
61	0205490101	NUT	2	
62	0209150080	NUT, FLANGE	2	
94	0105060510	HEX HEAD SCREW W/CAPTIVE WASHER	2	
33	0725223229	RUBBER, CUSHION	2	
109	GX270RT2QMTR280	ENGINE, HONDA 8.4 HP	1	
156	09521332110014	BATTERY BAND	1	
163	0973069170	BATTERY CABLE, POSITIVE	1	
164	0972069200	BATTERY CABLE, NEGATIVE	1	
177	8910507310	CAP	1	
178	8910507300	CAP	1	

PARTS MANUAL

HERE'S HOW TO GET HELP

PLEASE HAVE THE MODEL AND SERIAL NUMBER ON-HAND WHEN CALLING

UNITED STATES

Multiquip Inc.

(310) 537- 3700
6141 Katella Avenue Suite 200
Cypress, CA 90630
E-MAIL: mq@multiquip.com
WEBSITE: www.multiquip.com

CANADA

Multiquip

(450) 625-2244
4110 Industriel Boul.
Laval, Quebec, Canada H7L 6V3
E-MAIL: infocanada@multiquip.com

UNITED KINGDOM

Multiquip (UK) Limited Head Office

0161 339 2223
Unit 2, Northpoint Industrial Estate,
Globe Lane,
Dukinfield, Cheshire SK16 4UJ
E-MAIL: sales@multiquip.co.uk

© COPYRIGHT 2020, MULTIQUIP INC.

Multiquip Inc, the MQ logo are registered trademarks of Multiquip Inc. and may not be used, reproduced, or altered without written permission. All other trademarks are the property of their respective owners and used with permission.

This manual MUST accompany the equipment at all times. This manual is considered a permanent part of the equipment and should remain with the unit if resold.

The information and specifications included in this publication were in effect at the time of approval for printing. Illustrations, descriptions, references and technical data contained in this manual are for guidance only and may not be considered as binding. Multiquip Inc. reserves the right to discontinue or change specifications, design or the information published in this publication at any time without notice and without incurring any obligations.

Your Local Dealer is:

MULTIQUIP®